

BLAUBOX E 1000-3.6 Pro

Supply ventilation units

- Power of electrical reheater: 3600
- Sound-insulated casing
- Reheater: Electric
- Control: Remote Control
- Casing material: Galvanized steel

	Unit of measurement	BLAUBOX E 1000-3.6 Pro
Phases	-	3
Minimum supply voltage	V	400
Maximum supply voltage	V	400
Power supply frequency	Hz	50
Power of electrical reheater	W	3600
Maximum airflow	m³/h	990
Weight	kg	55
Transported air temperature (max)	°C	55
Transported air temperature (min)	°C	-25
Ambient air temperature max	°C	40
Ingress protection rating	-	IP22
Ingress protection rating of the drive	-	IP44
Ambient air humidity max	%	80

Dimensions

ØD	B	B1	H	L	L1
249	487	526.5	513	835	684

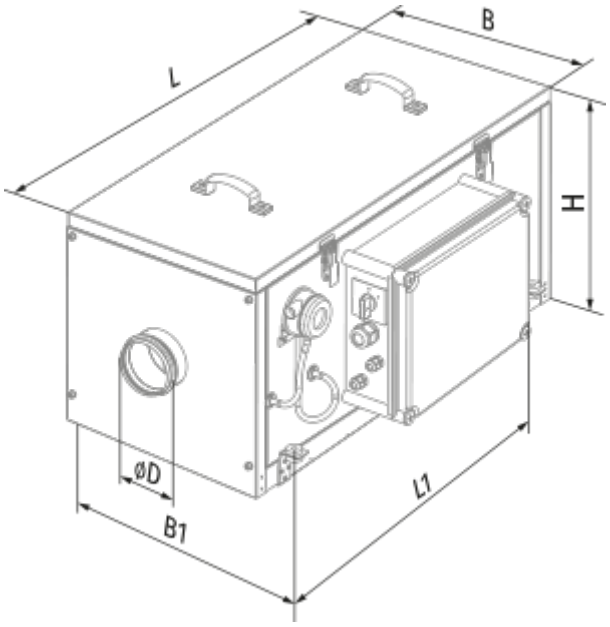

Accessories

For round ducts

Name	Photo	Description
SD 250/600		Silencers for round ducts
SD 250/900		Silencers for round ducts
SD 250/1200		Silencers for round ducts
SDF 250/600		Flexible silencers for round ducts
SDF 250/900		Flexible silencers for round ducts
SDF 250/2000		Flexible silencers for round ducts

For round ducts

Name	Photo	Description
VRV 250		Backdraft dampers with spring for round ducts

VKA 250		Air dampers for round ducts

For round ducts

Name	Photo	Description
EVA 250	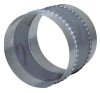	Flexible anti-vibration connectors for round ducts

Other accessories

Name	Photo	Description
FP 439x428x70 G4		G4 panel filter