


# Belimo TF24

Electric actuators

| | Unit of measurement | Belimo TF24 |
|---|---|---|
| Minimum supply voltage | V | 24 |
| Maximum supply voltage | V | 24 |
| Power supply frequency | Hz | 50/60 |
| Weight | kg | 0.6 |
| Ambient air temperature min | °C | -30 |
| Ambient air temperature max | °C | 50 |
| Ingress protection rating | - | IP42 |

## Dimensions

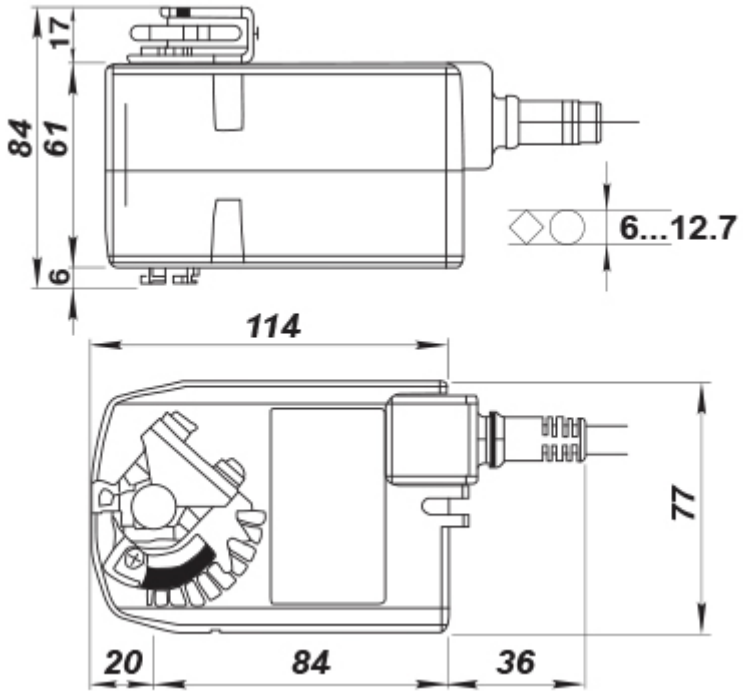
17
84
61
6
6...12.7
114
77
20
84
36