

Belimo TF230

Electric actuators

	Unit of measurement	Belimo TF230
Phases	-	1
Minimum supply voltage	V	230
Maximum supply voltage	V	230
Power supply frequency	Hz	50/60
Weight	kg	0.6
Ambient air temperature min	°C	-30
Ambient air temperature max	°C	50
Ingress protection rating	-	IP42

Dimensions

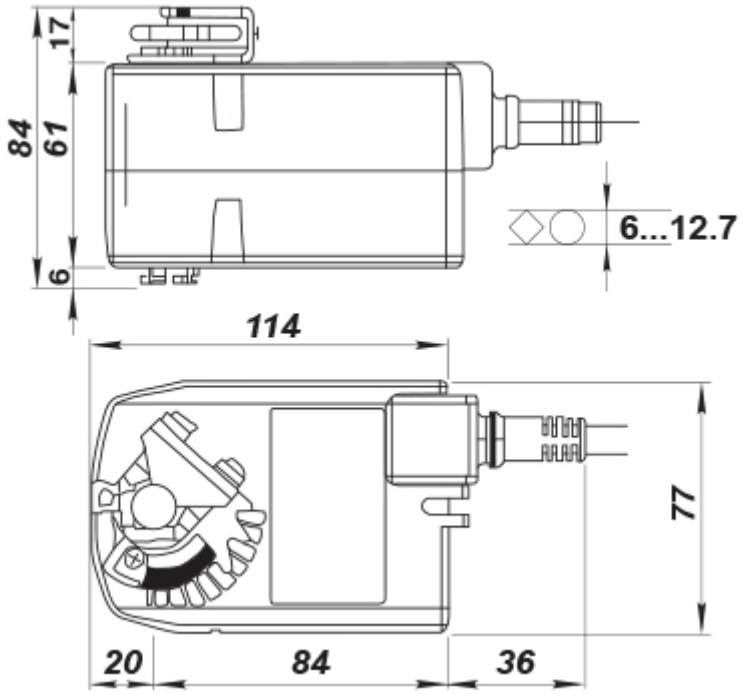
17
84
61
6
6...12.7
114
77
20
84
36