

Axis-QRA 150

Wall-mounted axial fans with aluminium impellers

- Impeller type: Axial
- Casing material: Coated steel
- Installation in any position

	Unit of measurement	Axis-QRA 150	
Phases	-	1	
Minimum supply voltage	V	220	
Maximum supply voltage	V	240	
Power supply frequency	Hz	50	60
Maximum airflow	m³/h	180	
Weight	kg	2.5	
Transported air temperature (max)	°C	40	
Transported air temperature (min)	°C	-30	
Ingress protection rating	-	IP24	
Ingress protection rating of the drive	-	IP44	
Impeller material	-	Aluminium	

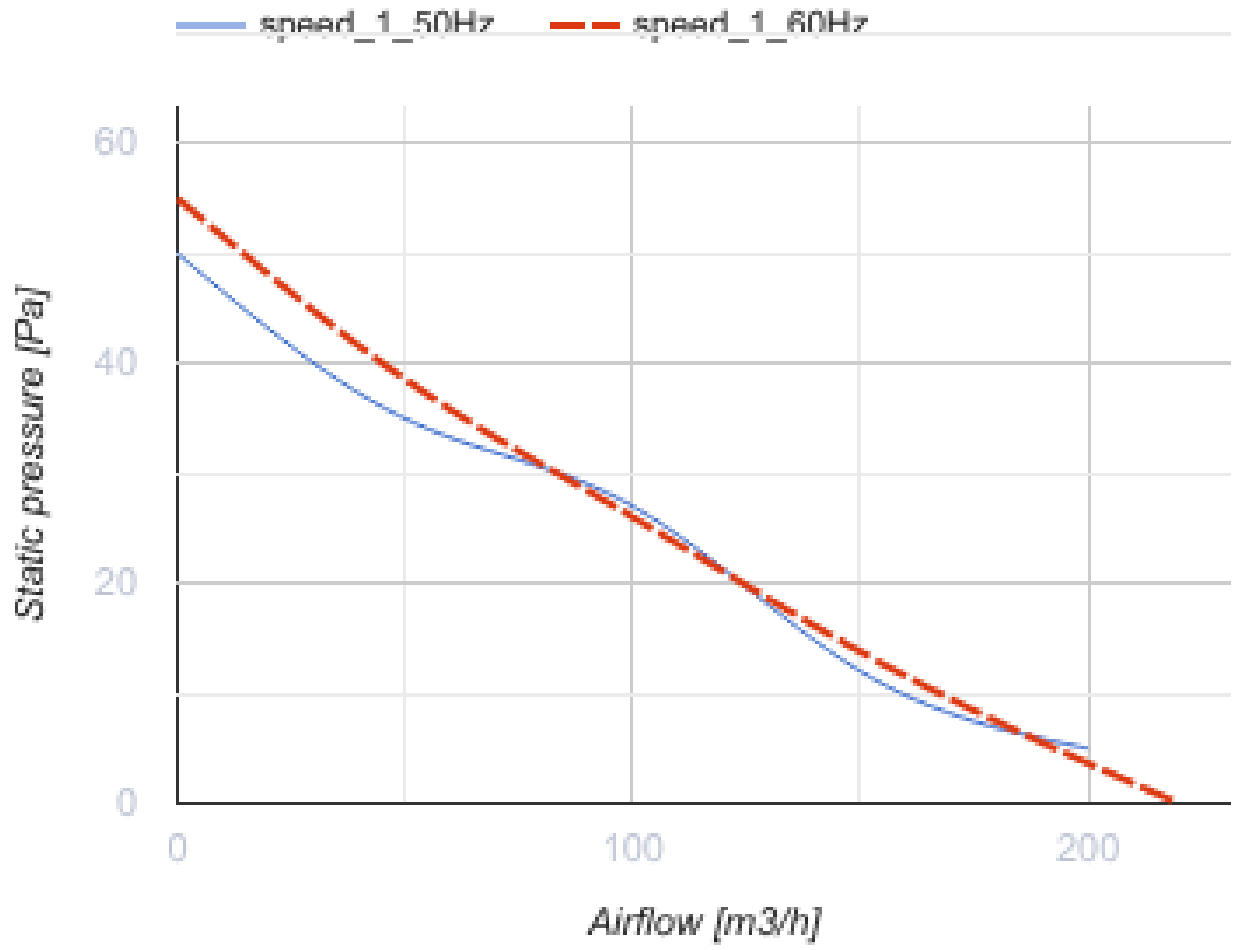
speed_1_50Hz
speed_1_60Hz
Static pressure [Pa]
60
40
20
0
0
100
200
Airflow [m3/h]

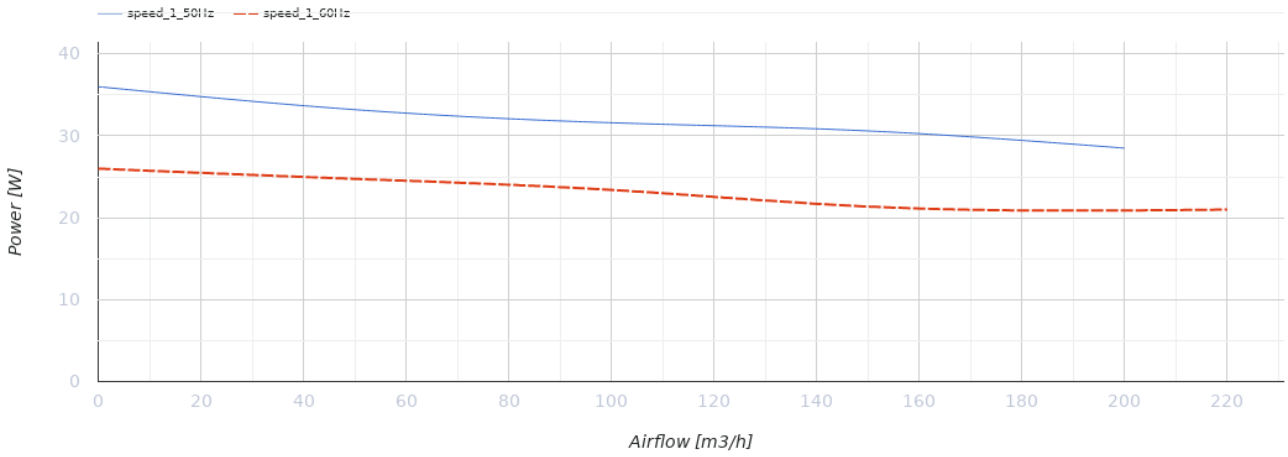
speed_1_50Hz
speed_1_60Hz
Power [W]
40
30
20
10
0
0
20
40
60
80
100
120
140
160
180
200
220
Airflow [m3/h]

Dimensions

ØD	ØD1	ØD2	Ød	L
162	190	220	7	120

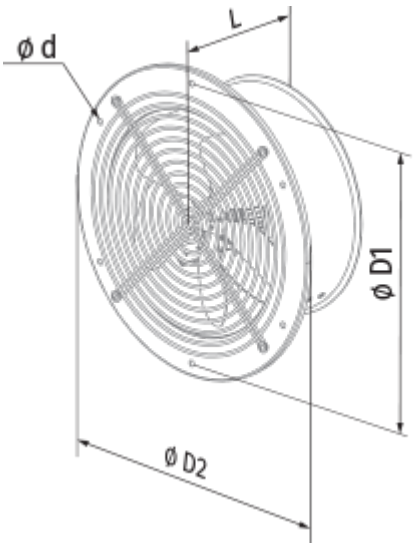

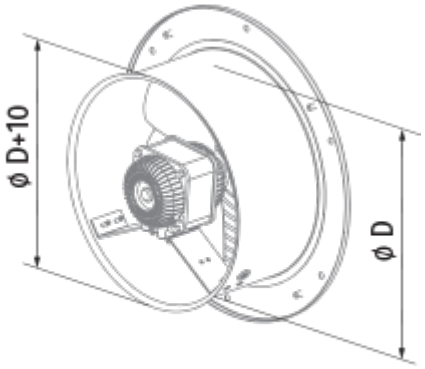

Ecodesign

Trademark	Blauberg
Model	Axis-QRA 150
Type of drive installed	External MSD or VSD
Type of heat recovery system	None
Nominal external pressure (Pa)	27
Maximum external leakage rates (%)	2.7
Static efficiency (%)	2.8
Declared typology	NRVU UVU
Effective electric power input (kW)	0.027
Sound power level (dB(A))	53

Accessories

Transformer speed controllers

Name	Photo	Description
CDR5E E3.5 TP		Single phase speed controller
CDR5E E5.0 TP		Single phase speed controller
CDR5E E7.5 TP		Single phase speed controller
CDR5E E1.5 TP		Single phase speed controller