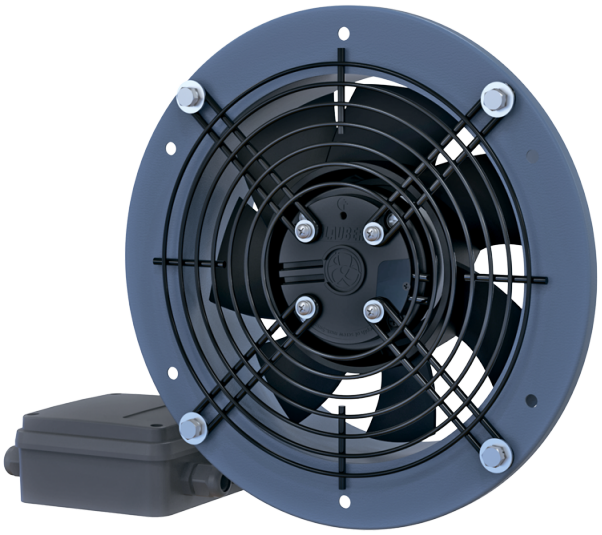

Axis-QR EC 350

Wall-mounted axial fans with EC-motors

- Impeller type: Axial
- Casing material: Coated steel

	Unit of measurement	Axis-QR EC 350
Phases	-	1
Minimum supply voltage	V	230
Maximum supply voltage	V	230
Power supply frequency	Hz	50/60
Maximum airflow	m³/h	3500
Weight	kg	3.8
Transported air temperature (max)	°C	60
Transported air temperature (min)	°C	-25
Ingress protection rating	-	IPX5
Ingress protection rating of the drive	-	IP55
Impeller material	-	Coated steel

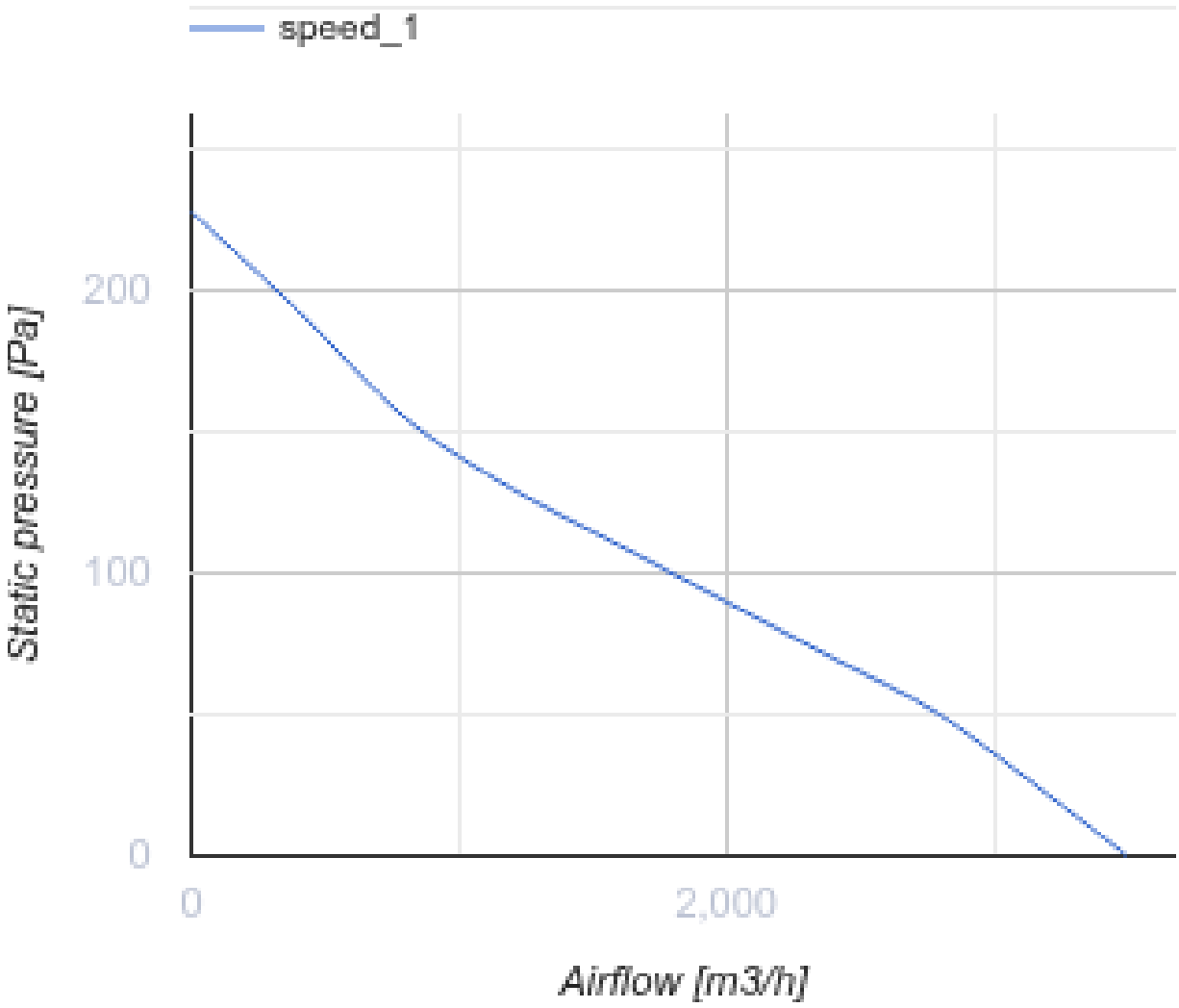

Dimensions

ØD	ØD1	ØD2	Ød	L	L1
374	442	460	9	97	157

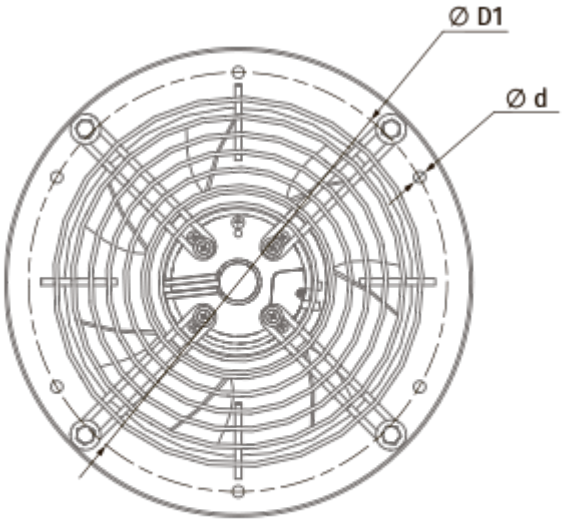
Ø D1
Ø d

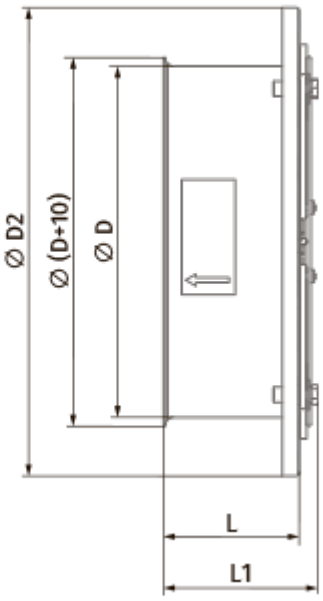
Ø D2
Ø (D+10)
Ø D
L
L1