

Axis-QR 550 6E

Wall-mounted axial fans

- Impeller type: Axial
- Casing material: Coated steel
- Installation in any position

	Unit of measurement	Axis-QR 550 6E
Phases	-	1
Minimum supply voltage	V	220
Maximum supply voltage	V	240
Power supply frequency	Hz	50
Maximum airflow	m³/h	6400
Weight	kg	16.5
Transported air temperature (max)	°C	60
Transported air temperature (min)	°C	-30
Ingress protection rating	-	IP24
Ingress protection rating of the drive	-	IP54
Impeller material	-	Coated steel

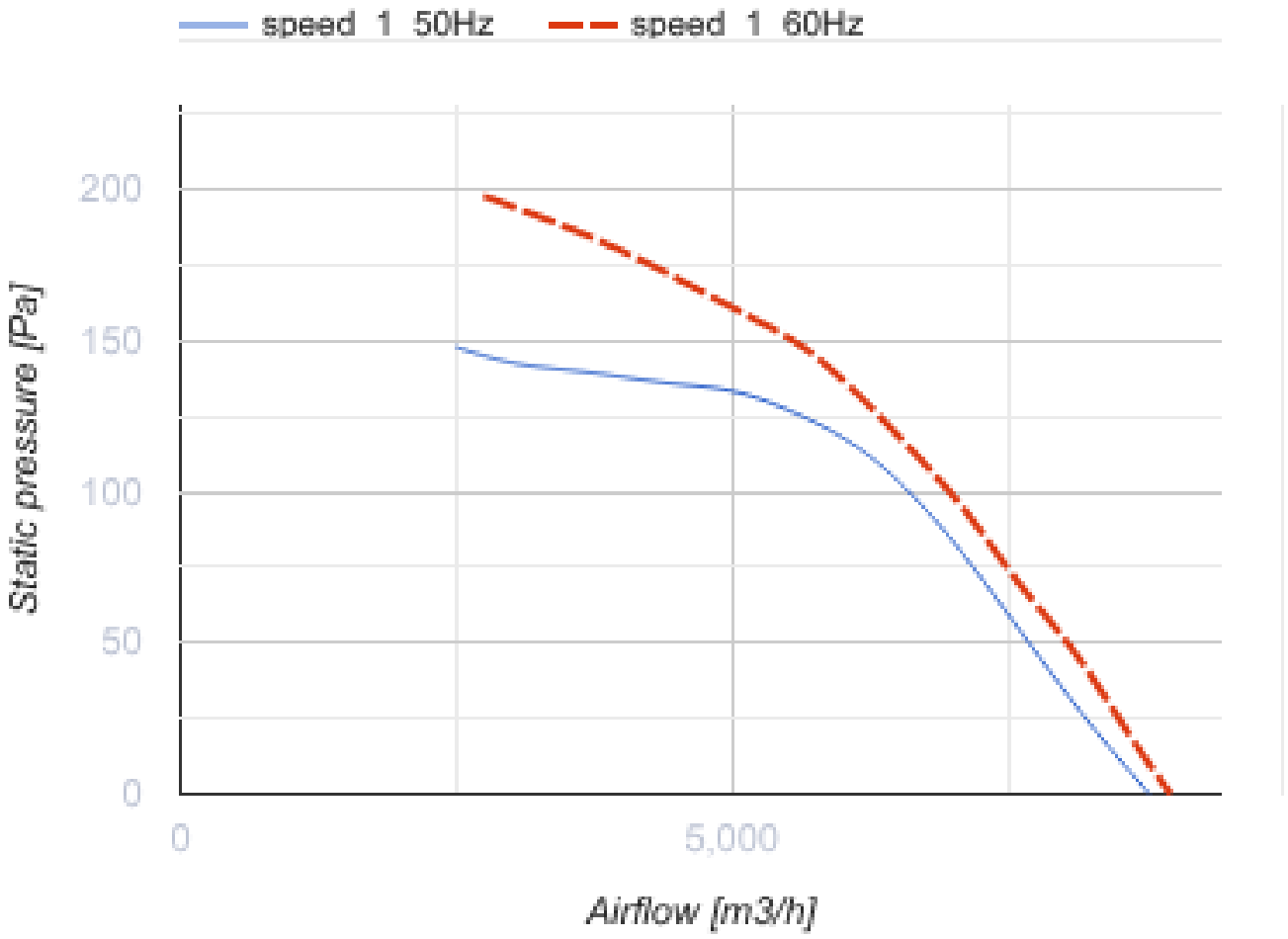
speed 1 50Hz
speed 1 60Hz
200
150
100
50
0
Static pressure [Pa]
0
5,000
Airflow [m3/h]

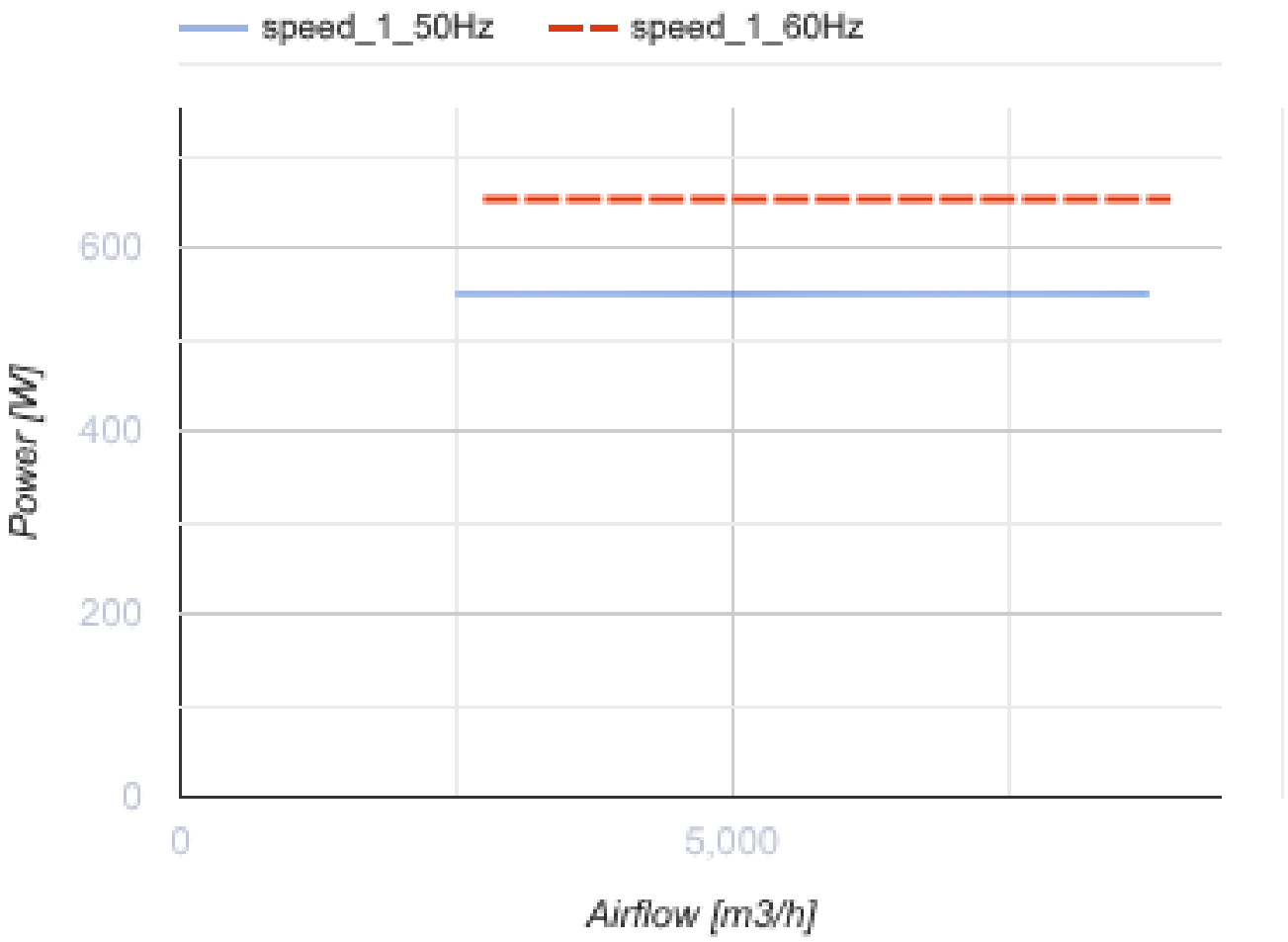

Dimensions

ØD	ØD1	ØD2	Ød	L
570	645	710	11	260

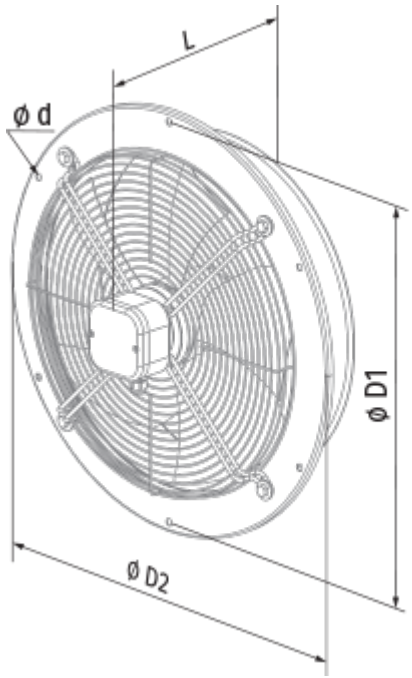
L
ø d
ø D1
ø D2

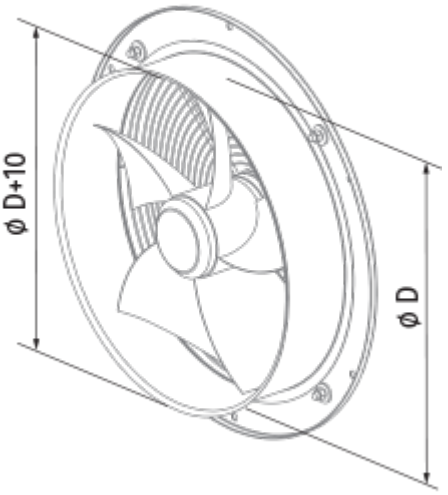
ø D+10
ø D

Ecodesign

Trademark	Blauberg
Model	Axis-QR 550 6E
Type of drive installed	External MSD or VSD
Type of heat recovery system	None
Nominal external pressure (Pa)	120
Maximum external leakage rates (%)	2.7
Static efficiency (%)	34.7
Declared typology	NRVU UVU
Effective electric power input (kW)	0.581
Sound power level (dB(A))	90