

Axis-QR 500 6D (220V/60Hz)

Wall-mounted axial fans

- Impeller type: Axial
- Casing material: Coated steel
- Installation in any position

	Unit of measurement	Axis-QR 500 6D (220V/60Hz)
Phases	-	3
Minimum supply voltage	V	400
Maximum supply voltage	V	400
Power supply frequency	Hz	60
Weight	kg	14
Transported air temperature (max)	°C	50
Transported air temperature (min)	°C	-30
Ingress protection rating	-	IP24
Ingress protection rating of the drive	-	IP54
Impeller material	-	Coated steel

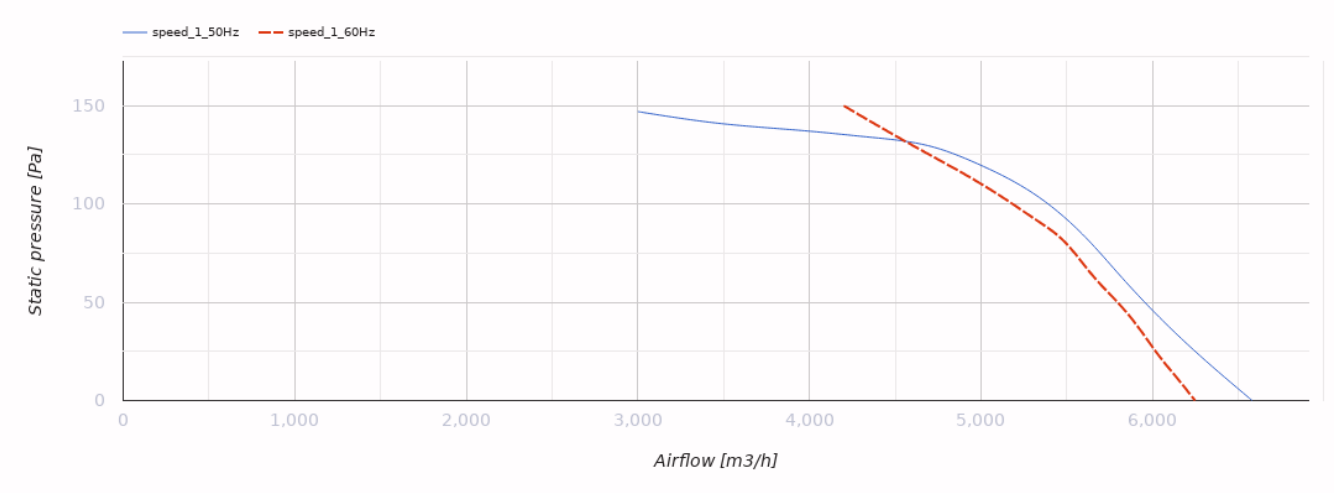
speed_1_50Hz
speed_1_60Hz
Static pressure [Pa]
150
100
50
0
0
1,000
2,000
3,000
4,000
5,000
6,000
Airflow [m3/h]

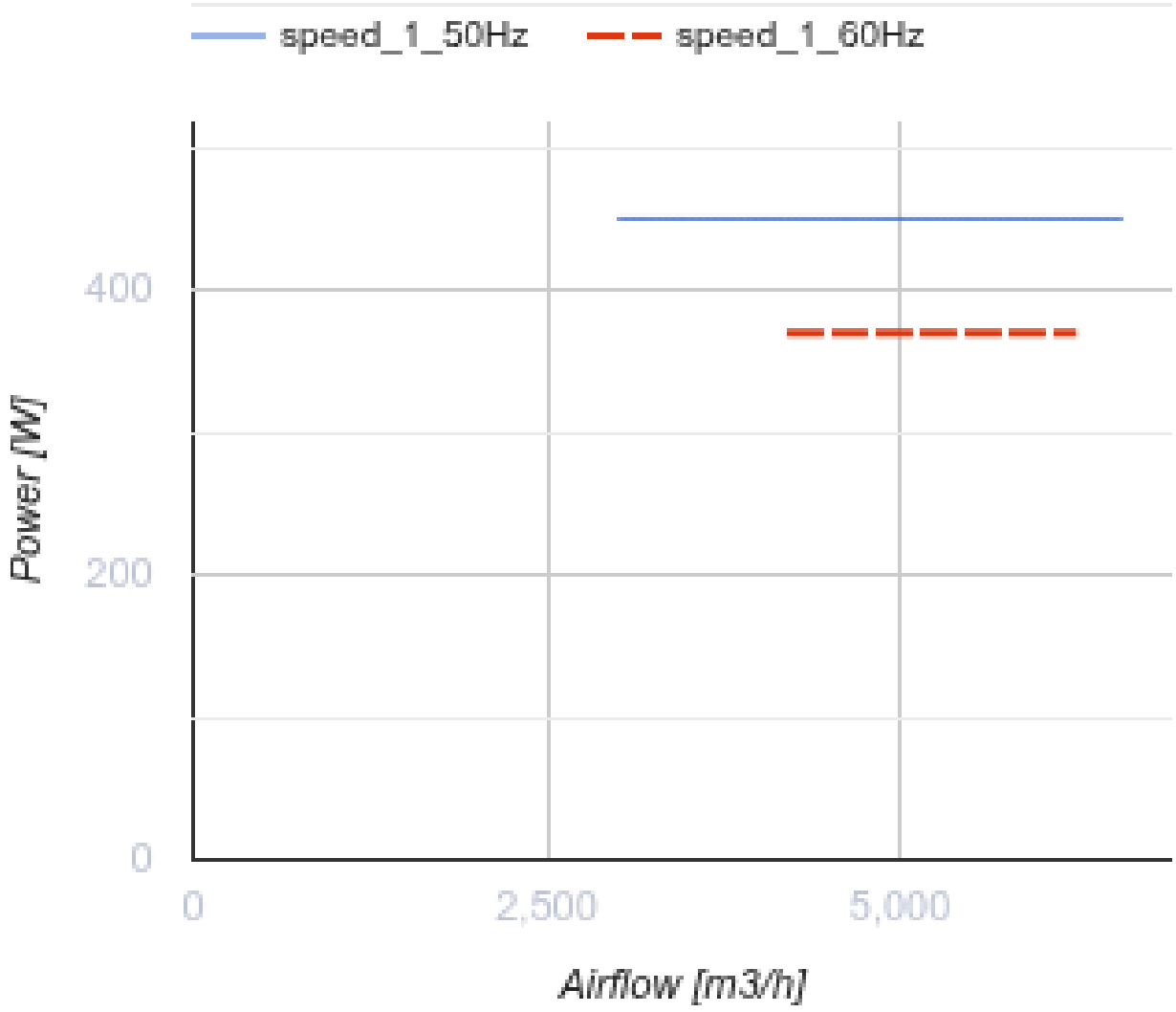
speed_1_50Hz
speed_1_60Hz
Power [W]
400
200
0
0
2,500
5,000
Airflow [m3/h]

Dimensions

ØD	ØD1	ØD2	Ød	L
520	590	655	11	250

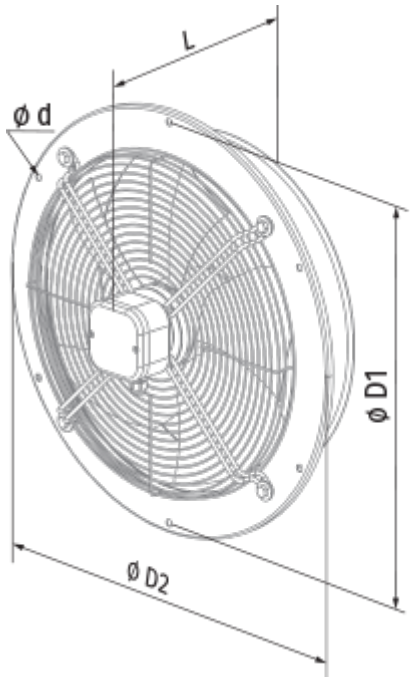

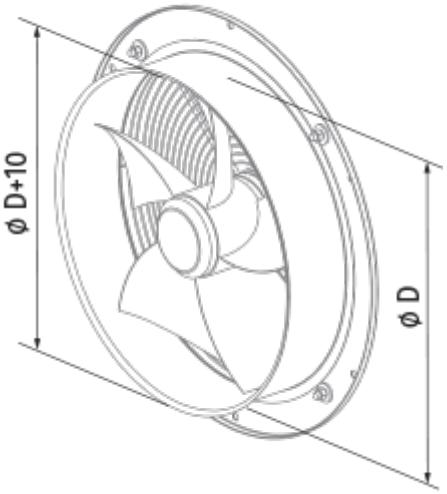

Ecodesign

Trademark	Blauberg
Model	Axis-QR 500 6D (220V/60Hz)
Type of drive installed	External MSD or VSD
Type of heat recovery system	None
Nominal external pressure (Pa)	120
Maximum external leakage rates (%)	2.7
Static efficiency (%)	35.5
Declared typology	NRVU UVU
Effective electric power input (kW)	0.478
Sound power level (dB(A))	92