

Axis-QR 250 2D

Wall-mounted axial fans

- Impeller type: Axial
- Casing material: Coated steel
- Installation in any position

	Unit of measurement	Axis-QR 250 2D	
Phases	-	3	
Maximum supply voltage	V	400	
Minimum supply voltage	V	400	
Power supply frequency	Hz	50	60
Maximum airflow	m³/h	1060	
Weight	kg	3.8	
Transported air temperature (max)	°C	60	
Transported air temperature (min)	°C	-30	
Ingress protection rating	-	IP24	
Ingress protection rating of the drive	-	IP54	
Impeller material	-	Coated steel	

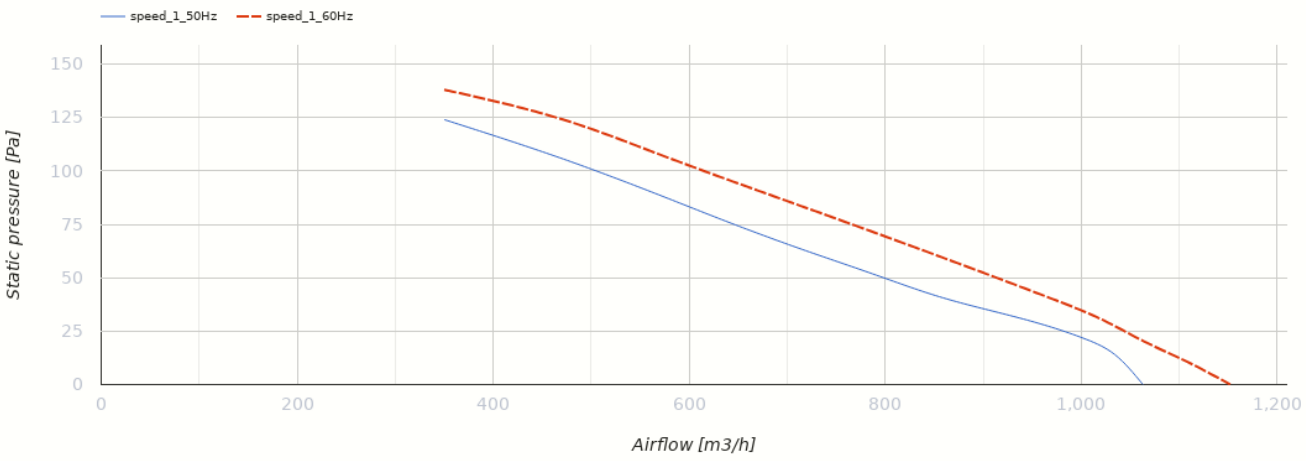
speed_1_50Hz
speed_1_60Hz
Static pressure [Pa]
150
125
100
75
50
25
0
0
200
400
600
800
1,000
1,200
Airflow [m3/h]

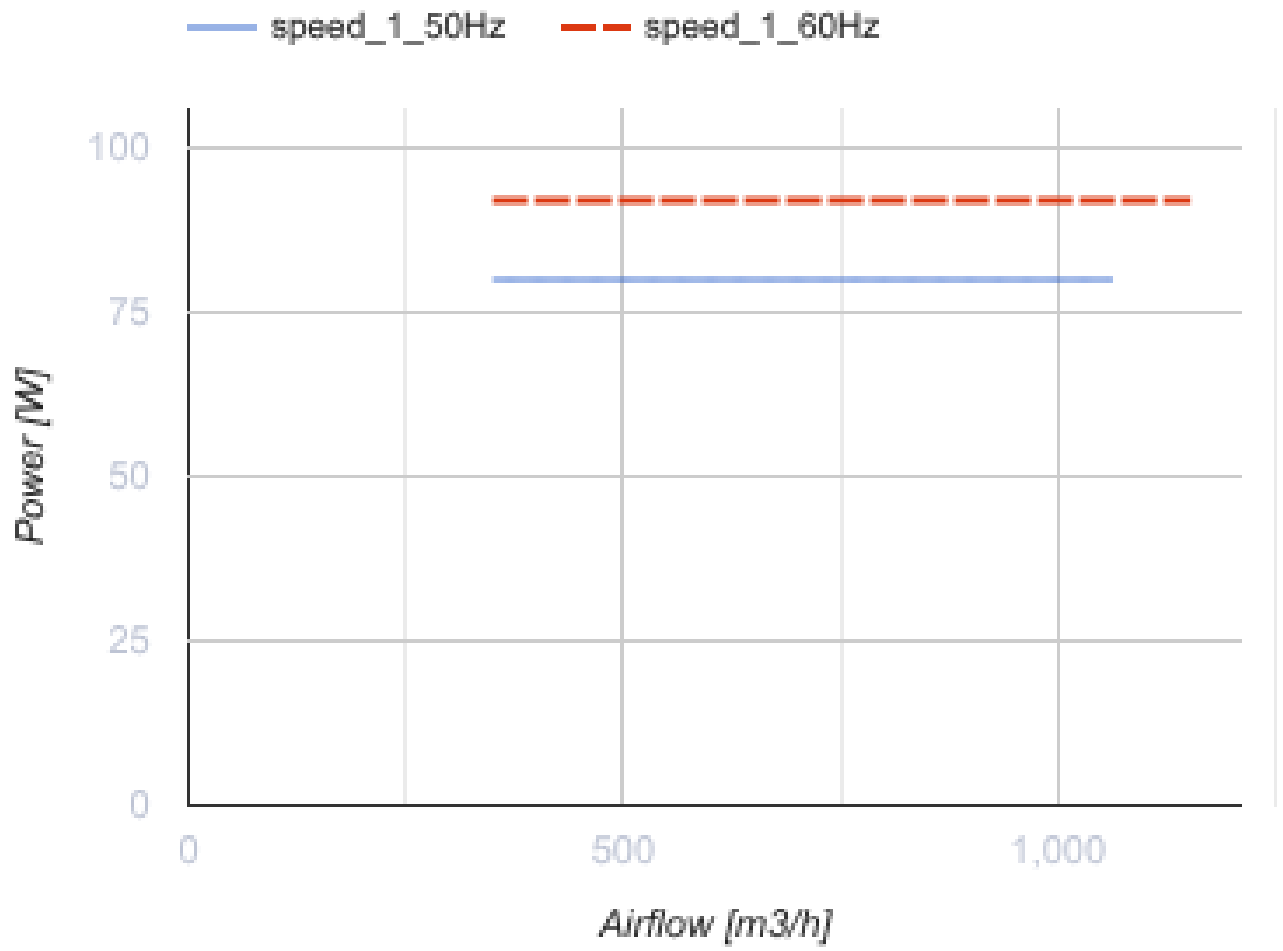
speed_1_50Hz
speed_1_60Hz
Power [W]
100
75
50
25
0
0
500
1,000
Airflow [m3/h]

Dimensions

ØD	ØD1	ØD2	Ød	L
260	318	340	7	135

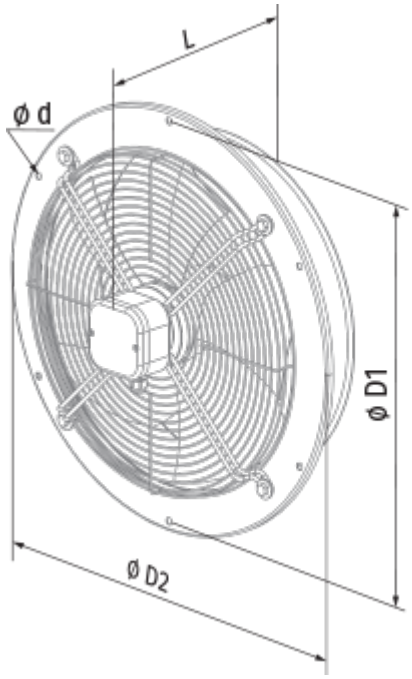

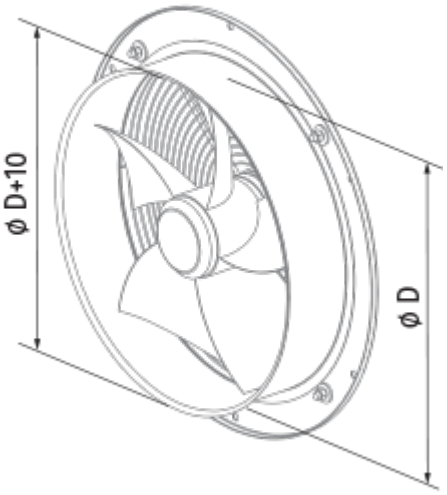

Accessories

Speed controllers

Name	Photo	Description
CDT E1.8		Thyristor speed controller