

Axis-QR 200 2E

Wall-mounted axial fans

- Impeller type: Axial
- Casing material: Coated steel
- Installation in any position

	Unit of measurement	Axis-QR 200 2E	
Phases	-	1	
Maximum supply voltage	V	240	
Minimum supply voltage	V	220	
Power supply frequency	Hz	50	60
Maximum airflow	m³/h	860	
Weight	kg	2.8	
Transported air temperature (max)	°C	60	
Transported air temperature (min)	°C	-30	
Ingress protection rating	-	IP24	
Ingress protection rating of the drive	-	IP44	
Impeller material	-	Coated steel	

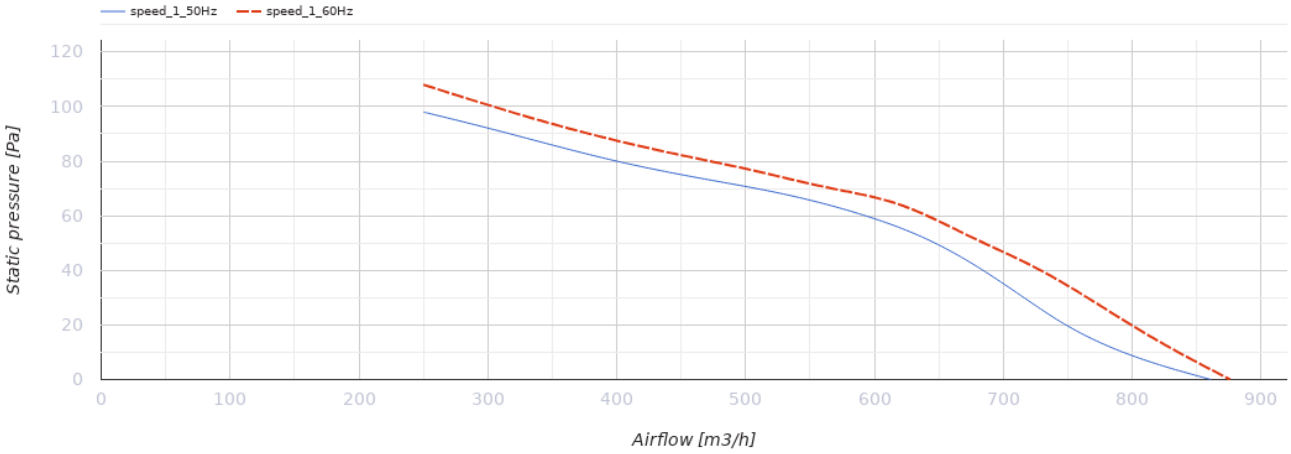
speed_1_50Hz
speed_1_60Hz
Static pressure [Pa]
120
100
80
60
40
20
0
0
100
200
300
400
500
600
700
800
900
Airflow [m3/h]

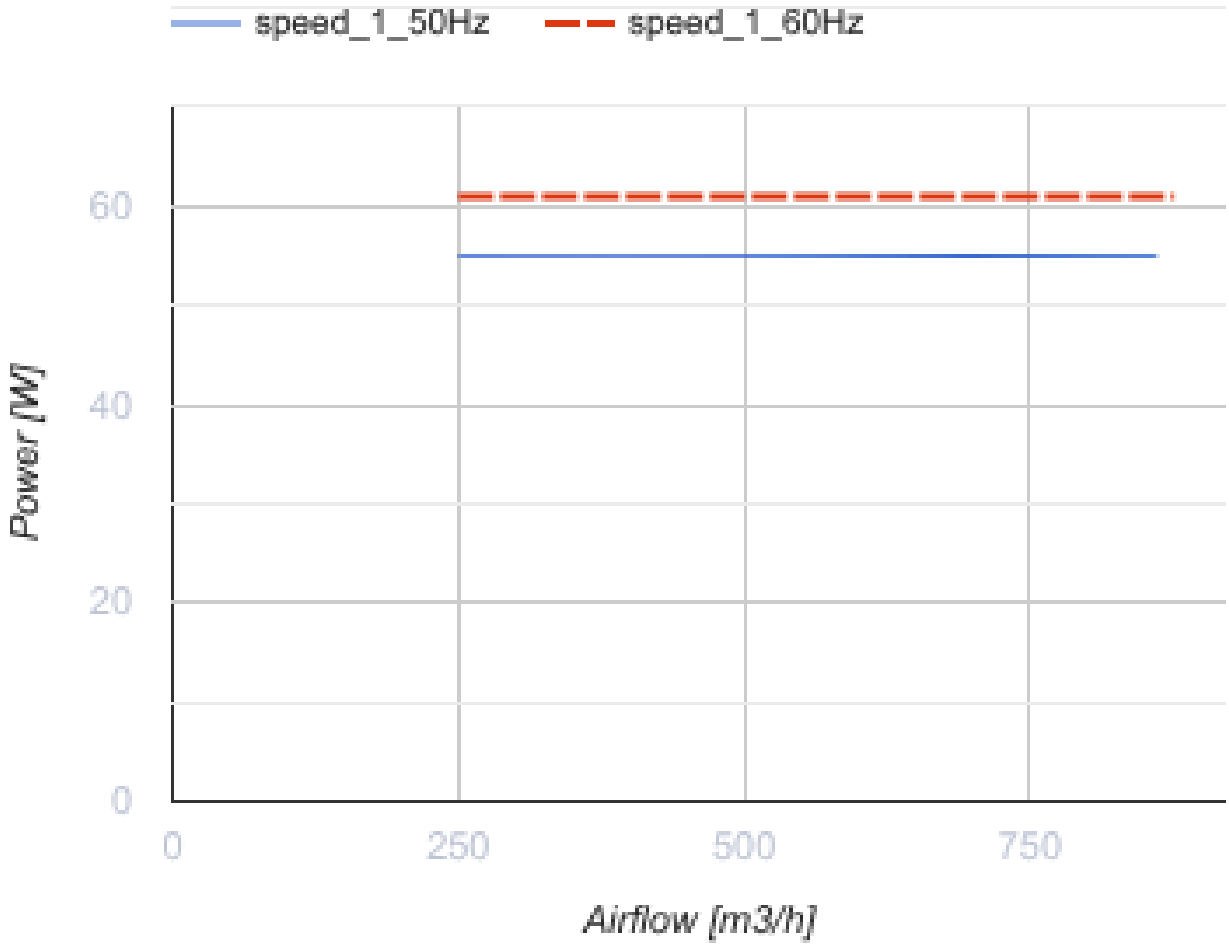
speed_1_50Hz
speed_1_60Hz
Power [W]
60
40
20
0
0
250
500
750
Airflow [m3/h]

Dimensions

ØD	ØD1	ØD2	Ød	L
210	250	280	7	125

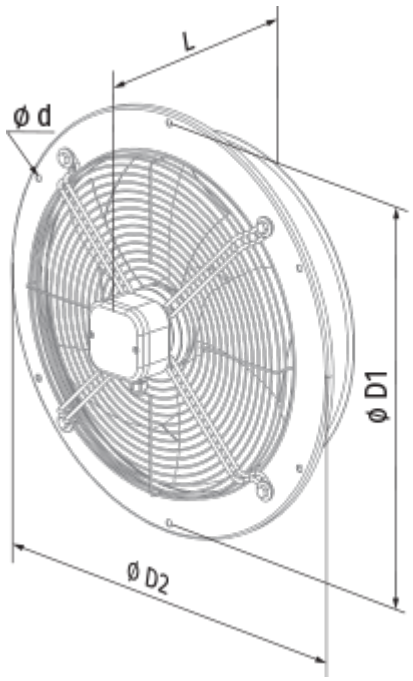

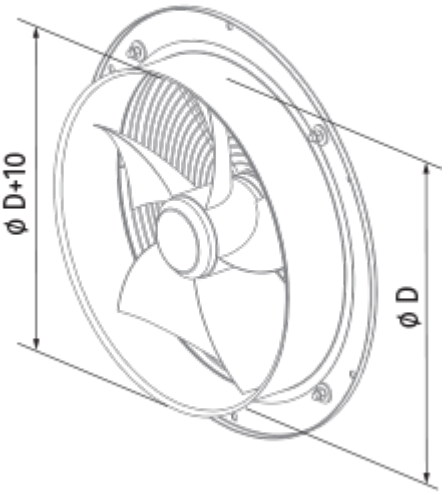

Ecodesign

Trademark	Blauberg
Model	Axis-QR 200 2E
Type of drive installed	External MSD or VSD
Type of heat recovery system	None
Nominal external pressure (Pa)	65
Maximum external leakage rates (%)	2.7
Static efficiency (%)	8.3
Sound power level (dB(A))	70
Effective electric power input (kW)	0.06
Declared typology	NRVU UVU

Accessories

Speed controllers

Name	Photo	Description
CDT E1.8		Thyristor speed controller