

Axis-QA 315

Wall-mounted axial fans aluminium impellers

- Impeller type: Axial
- Casing material: Coated steel
- Installation in any position

	Unit of measurement	Axis-QA 315	
Phases	-	1	
Minimum supply voltage	V	220	
Maximum supply voltage	V	240	
Power supply frequency	Hz	50	60
Maximum airflow	m³/h	1700	
Weight	kg	5.46	
Transported air temperature (max)	°C	40	
Transported air temperature (min)	°C	-30	
Ingress protection rating	-	IPX4	
Ingress protection rating of the drive	-	IP44	
Impeller material	-	Aluminium	

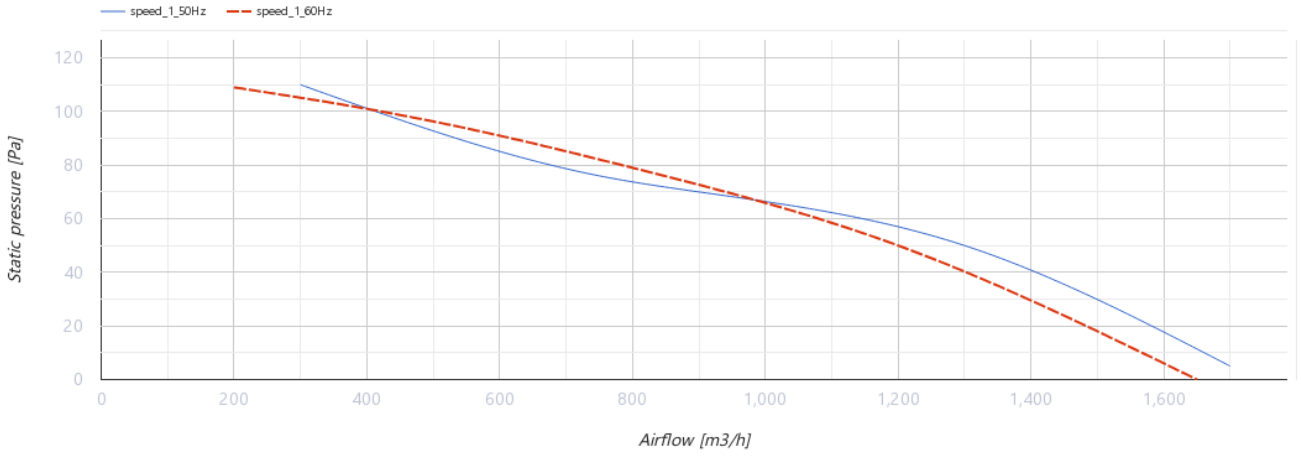

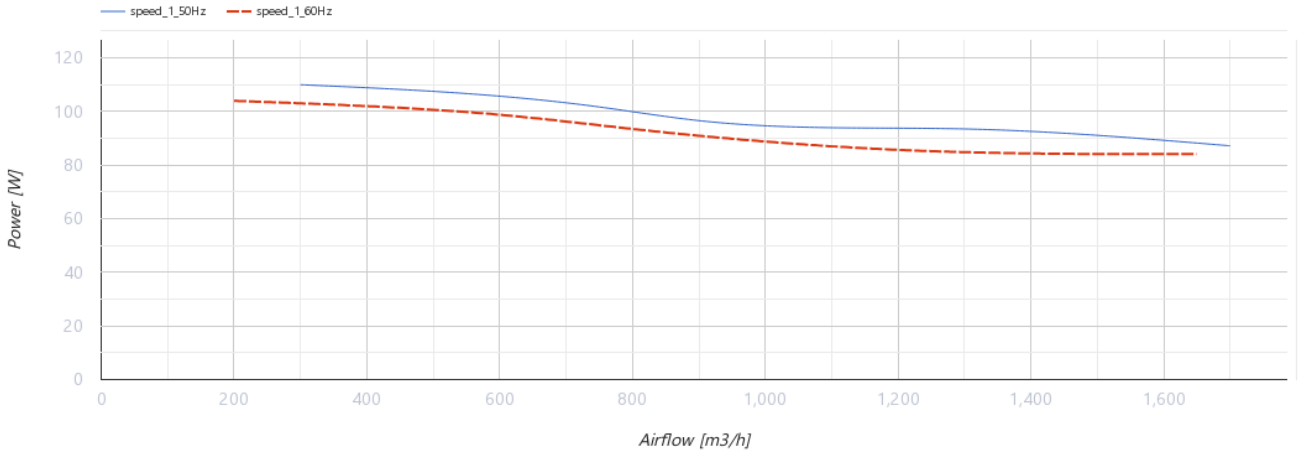

Dimensions

ØD	Ød	B	B1	L
312	9	430	380	170

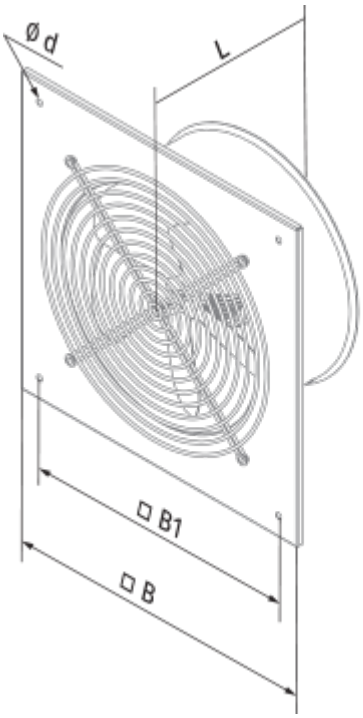
Ø d
L
□ B1
□ B

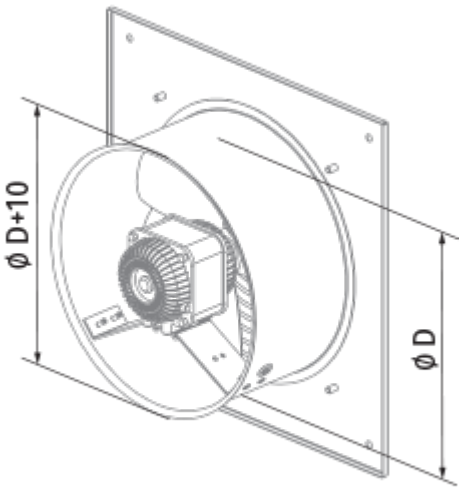
ϕ D+10
ϕ D

Ecodesign

Trademark	Blauberg
Model	Axis-QA 315
Type of drive installed	External MSD or VSD
Type of heat recovery system	None
Nominal external pressure (Pa)	87
Maximum external leakage rates (%)	2.7
Static efficiency (%)	16.2
Effective electric power input (kW)	0.09
Sound power level (dB(A))	74
Declared typology	NRVU UVU

Accessories

Transformer speed controllers

Name	Photo	Description
CDR5E E3.5 TP		Single phase speed controller
CDR5E E5.0 TP		Single phase speed controller
CDR5E E7.5 TP		Single phase speed controller
CDR5E E1.5 TP		Single phase speed controller