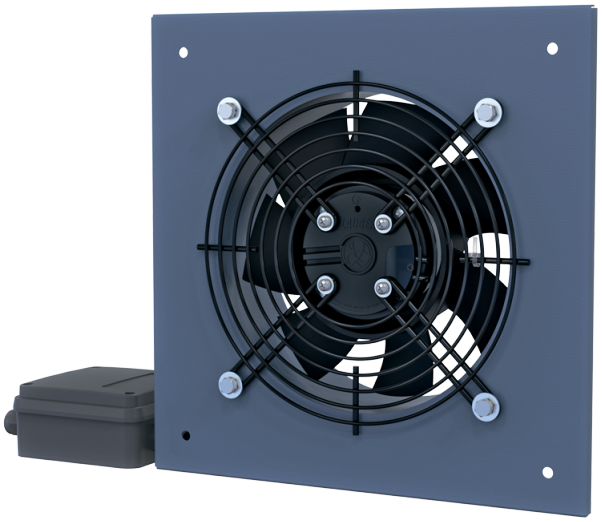

# Axis-Q EC 500

Wall-mounted axial fans with EC-motors

- Impeller type: Axial
- Casing material: Coated steel

| | Unit of measurement | Axis-Q EC 500 |
|---|---|---|
| Phases | - | 1 |
| Minimum supply voltage | V | 230 |
| Maximum supply voltage | V | 230 |
| Power supply frequency | Hz | 50/60 |
| Maximum airflow | $m^3/h$ | 8500 |
| Weight | kg | 8.31 |
| Transported air temperature (max) | °C | 60 |
| Transported air temperature (min) | °C | -25 |
| Ingress protection rating | - | IPX5 |
| Ingress protection rating of the drive | - | IP55 |
| Impeller material | - | Coated steel |

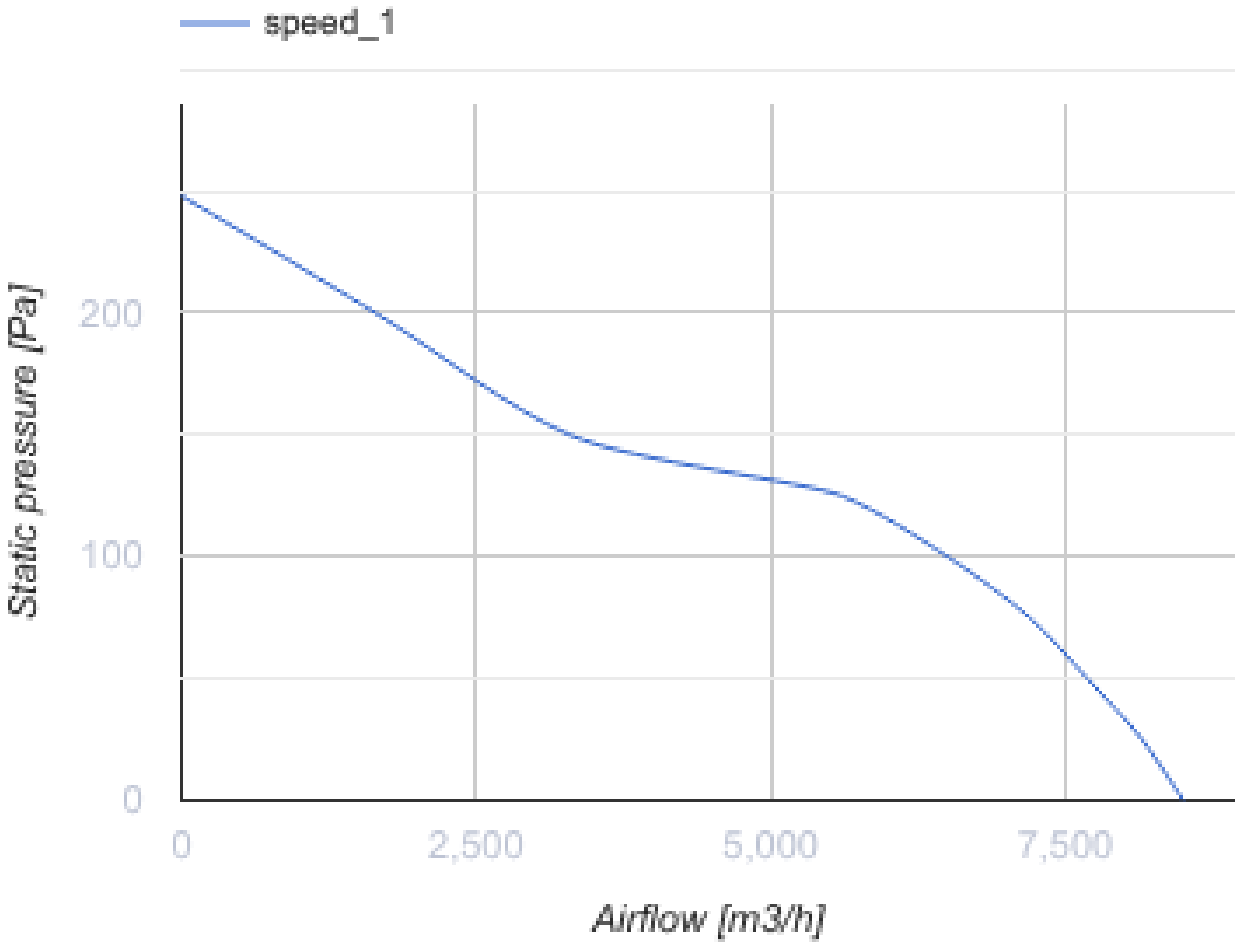


## Dimensions

| ØD | ØD1 | Ød | L | L1 | W | W1 |
|---|---|---|---|---|---|---|
| 520 | 568 | 11 | 180 | 294 | 655 | 615 |

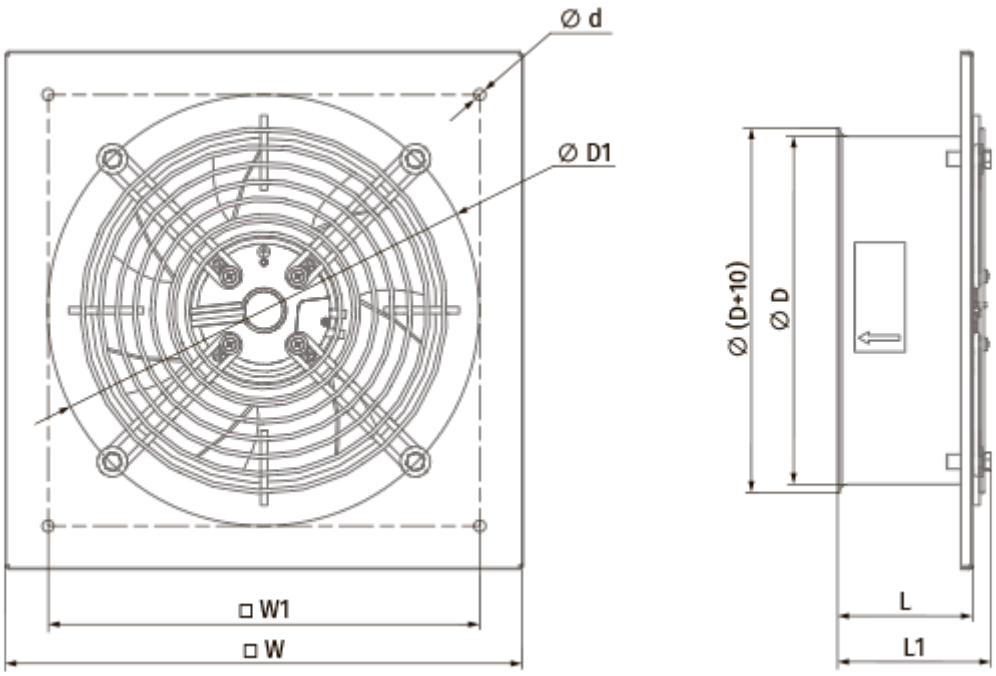
Ø d
Ø D1
□ W1
□ W
Ø (D+10)
Ø D
L
L1