

Axis-Q 710 8D

Wall-mounted axial fans

- Impeller type: Axial
- Casing material: Coated steel
- Installation in any position

	Unit of measurement	Axis-Q 710 8D
Phases	-	3
Minimum supply voltage	V	400
Maximum supply voltage	V	400
Power supply frequency	Hz	50
Maximum airflow	m³/h	12000
Weight	kg	33
Transported air temperature (max)	°C	60
Transported air temperature (min)	°C	-30
Ingress protection rating	-	IP24
Ingress protection rating of the drive	-	IP54
Impeller material	-	Coated steel

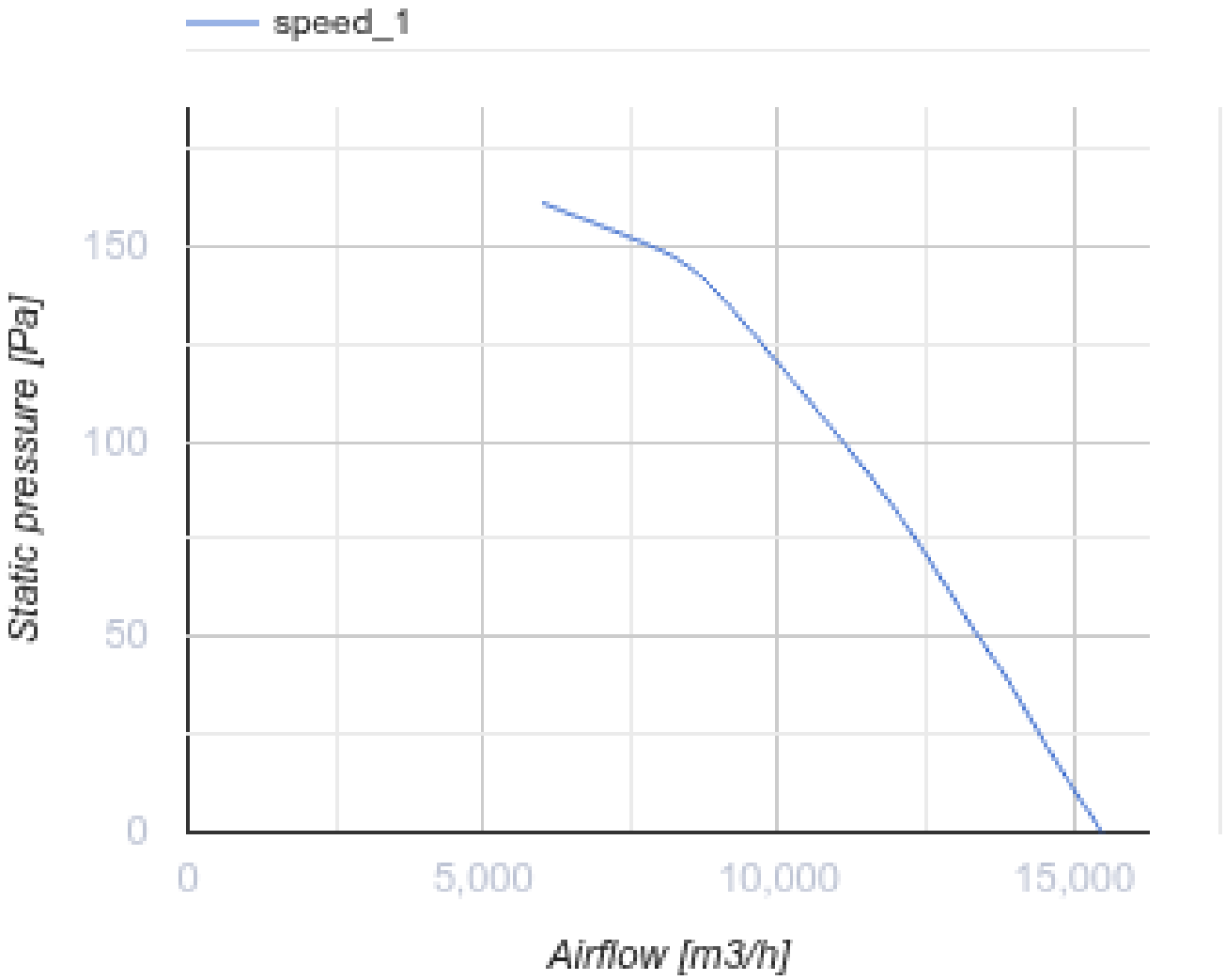
speed_1
150
100
50
0
Static pressure [Pa]
0
5,000
10,000
15,000
Airflow [m3/h]

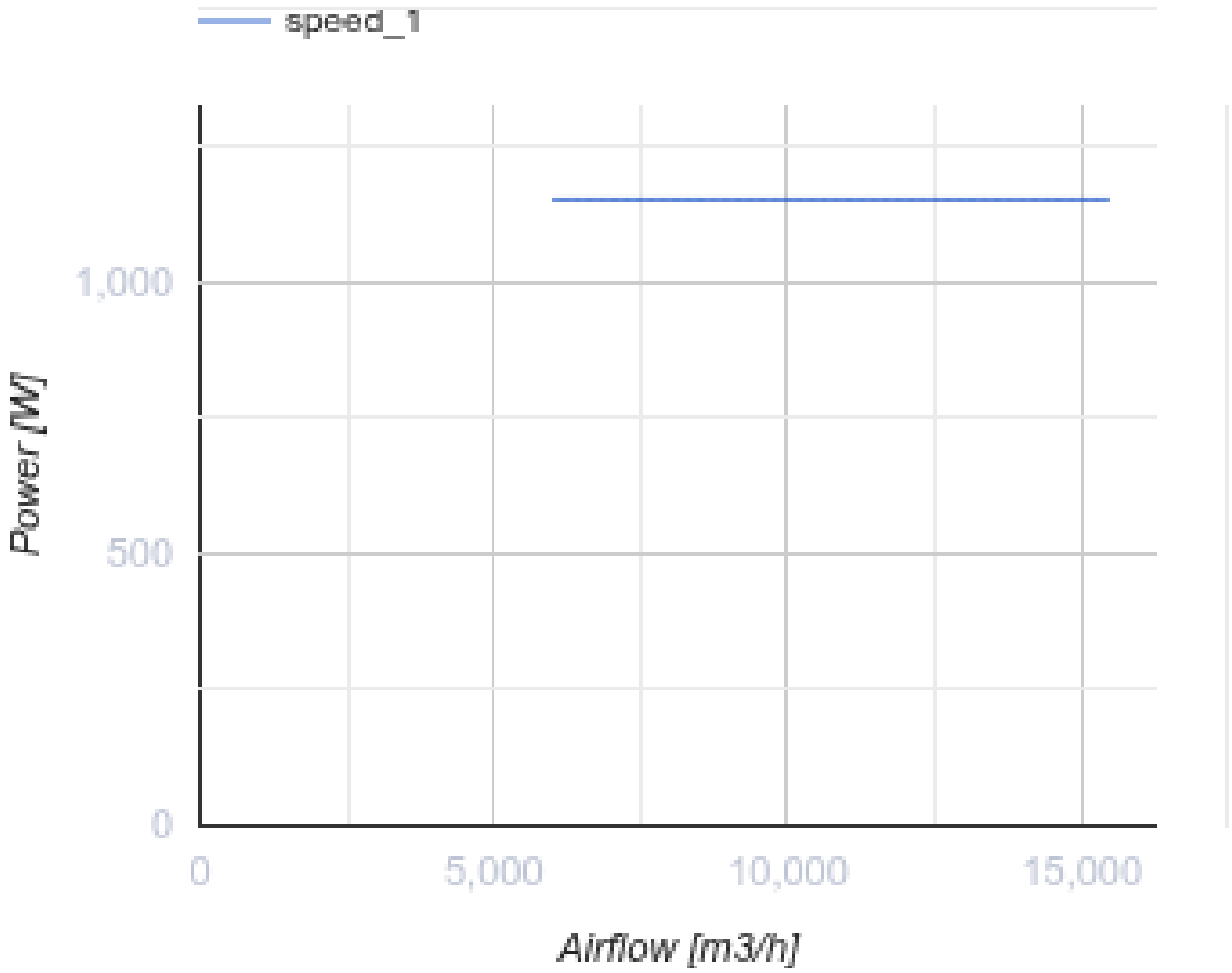

Dimensions

ØD	Ød	B	B1	L
725	13	900	810	350

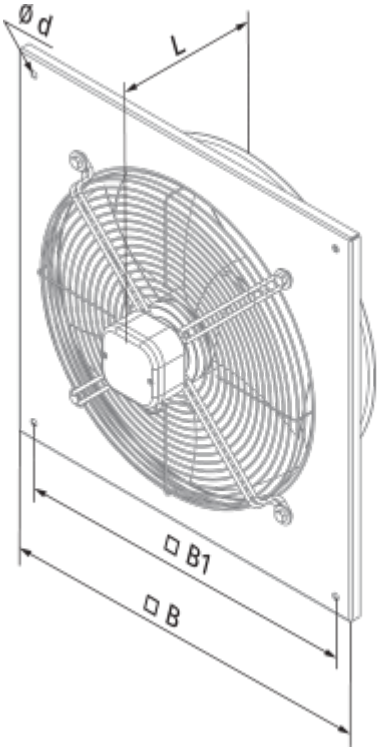
Ø d
L
□ B1
□ B

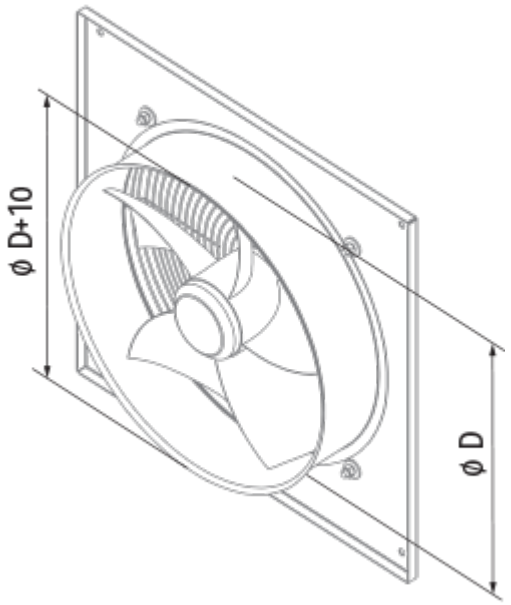
ø D+10
ø D