

# Axis-Q 300 2E

Wall-mounted axial fans

- Impeller type: Axial
- Casing material: Coated steel
- Installation in any position

| | Unit of measurement | Axis-Q 300 2E | |
|---|---|---|---|
| Phases | - | 1 | |
| Maximum supply voltage | V | 240 | |
| Minimum supply voltage | V | 220 | |
| Power supply frequency | Hz | 50 | 60 |
| Maximum airflow | m³/h | 2230 | |
| Weight | kg | 6.1 | |
| Transported air temperature (max) | °C | 60 | |
| Transported air temperature (min) | °C | -30 | |
| Ingress protection rating | - | IP24 | |
| Ingress protection rating of the drive | - | IP54 | |
| Impeller material | - | Coated steel | |

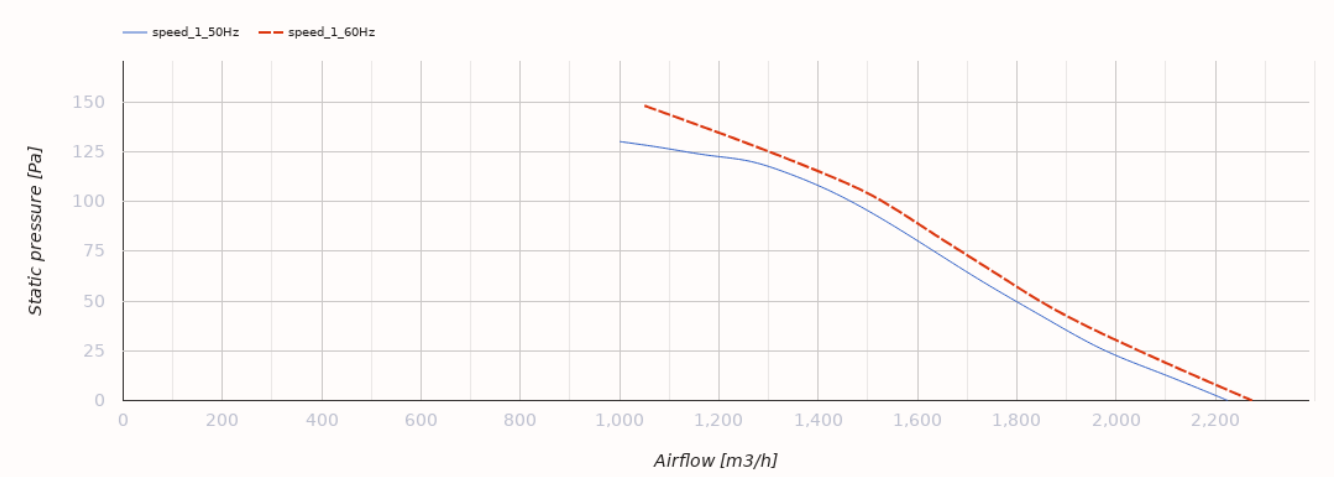


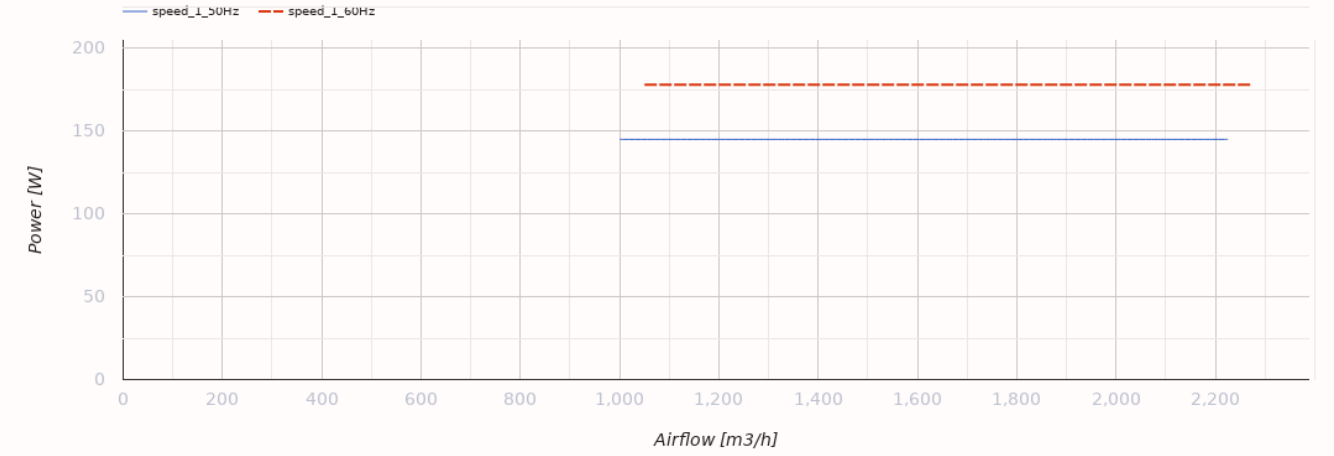


## Dimensions

| ØD | Ød | B | B1 | L |
|---|---|---|---|---|
| 317 | 9 | 430 | 380 | 145 |

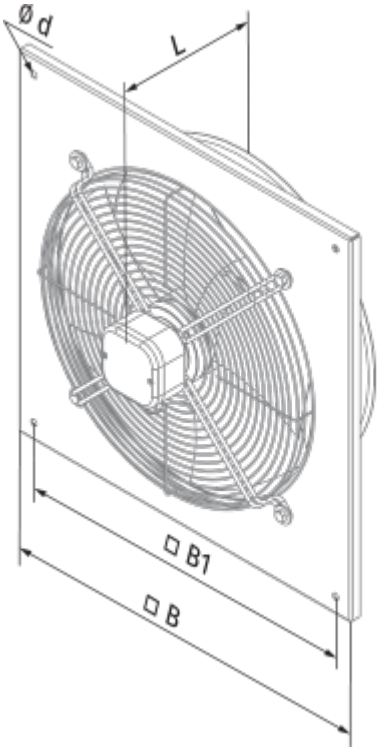
Ø d
L
□ B1
□ B

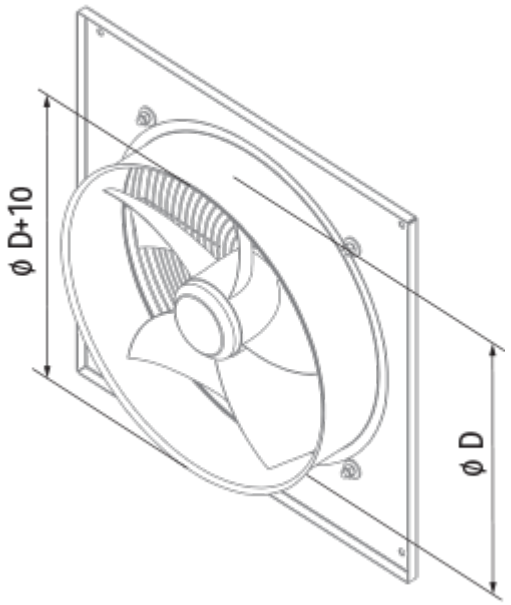
ø D+10
ø D

## Ecodesign

| | |
|---|---|
| Trademark | Blauberg |
| Model | Axis-Q 300 2E |
| Type of drive installed | External MSD or VSD |
| Type of heat recovery system | None |
| Nominal external pressure (Pa) | 110 |
| Maximum external leakage rates (%) | 2.7 |
| Static efficiency (%) | 30.5 |
| Sound power level (dB(A)) | 80 |
| Effective electric power input (kW) | 0.141 |
| Declared typology | NRVU UVU |