

Axis-Q 250 4E

Wall-mounted axial fans

- Impeller type: Axial
- Casing material: Coated steel
- Installation in any position

	Unit of measurement	Axis-Q 250 4E	
Phases	-	1	
Minimum supply voltage	V	220	
Maximum supply voltage	V	240	
Power supply frequency	Hz	50	60
Maximum airflow	m³/h	800	
Weight	kg	3.5	
Transported air temperature (max)	°C	60	
Transported air temperature (min)	°C	-30	
Ingress protection rating	-	IP24	
Ingress protection rating of the drive	-	IP44	
Impeller material	-	Coated steel	

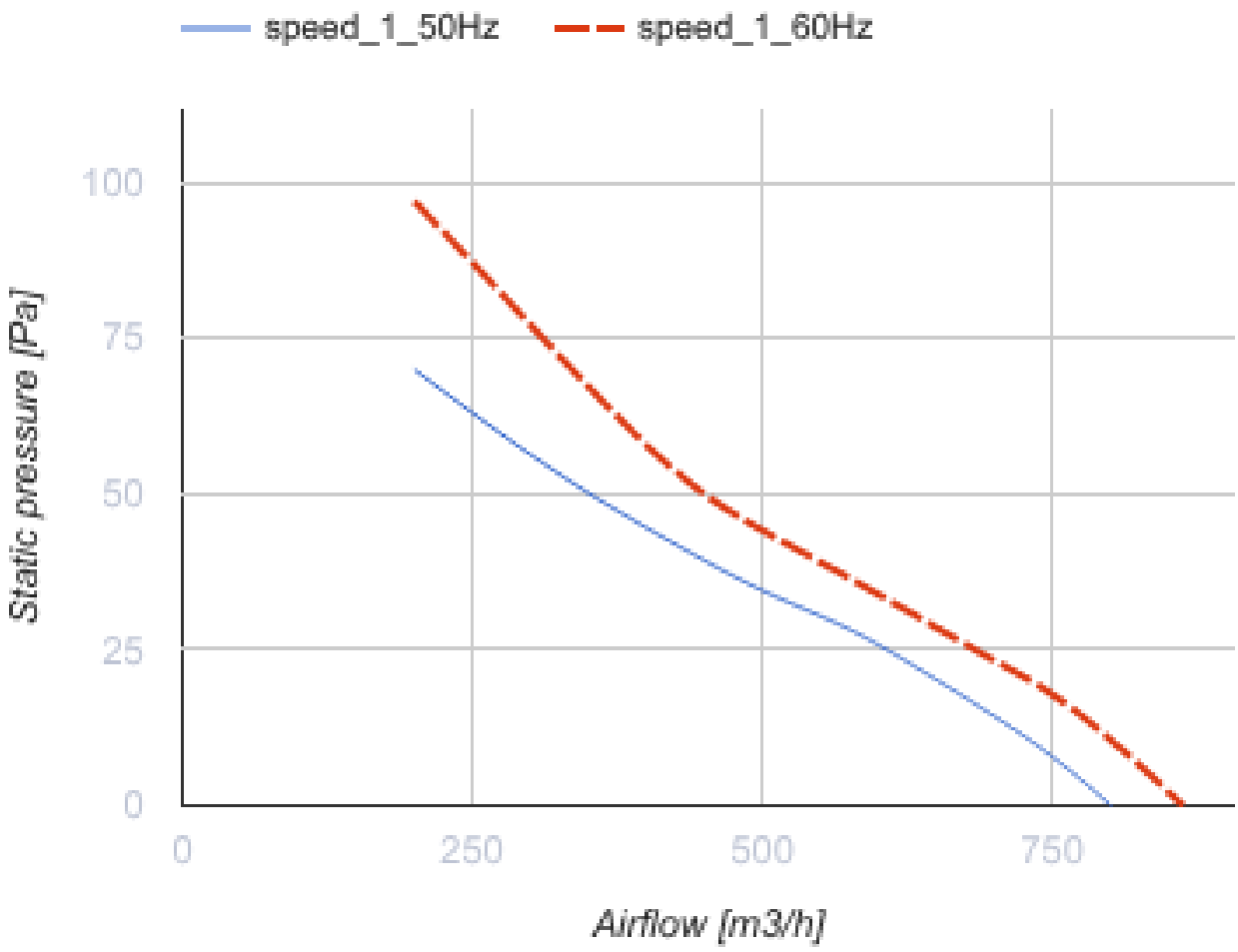
speed_1_50Hz
speed_1_60Hz
100
75
50
25
0
Static pressure [Pa]
0
250
500
750
Airflow [m3/h]

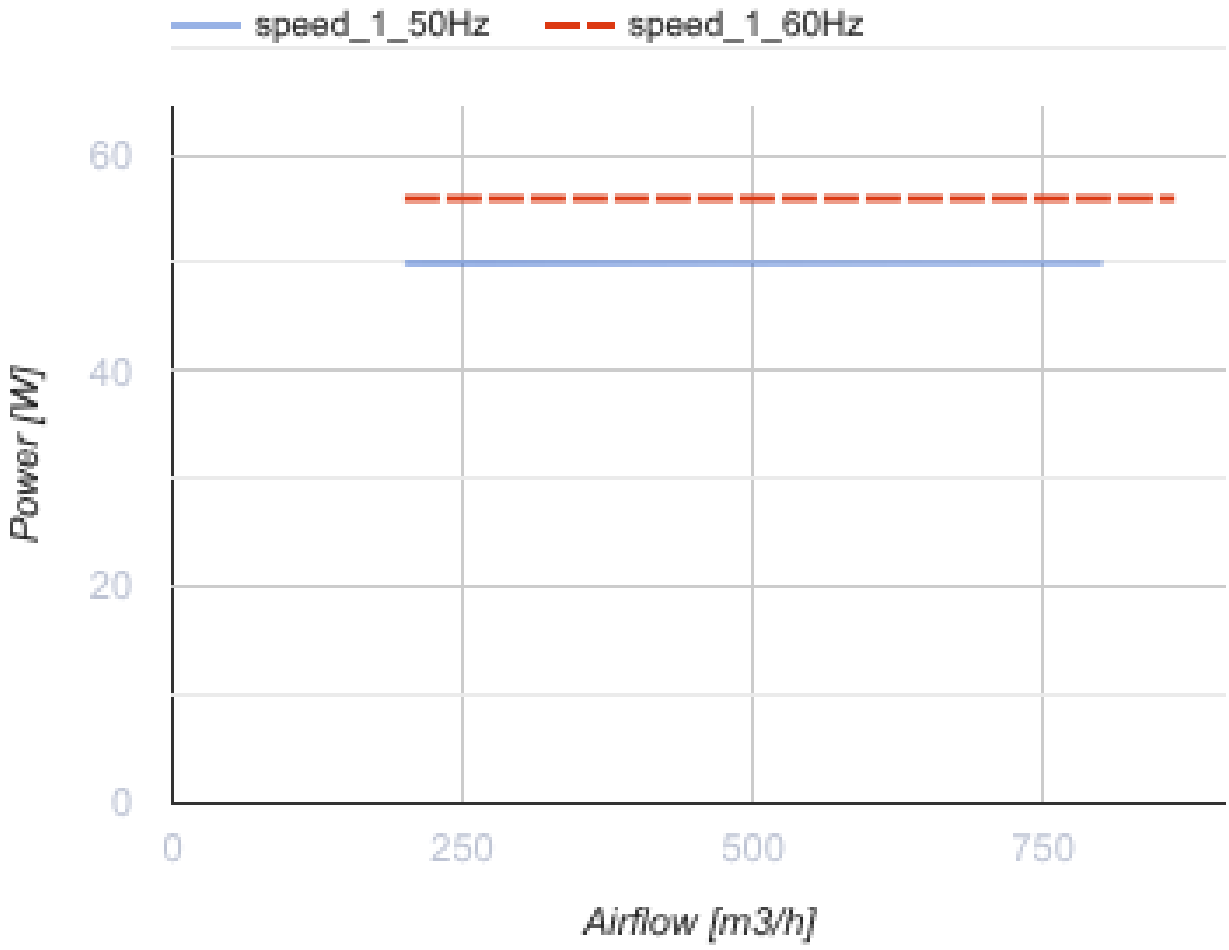

Dimensions

ØD	Ød	B	B1	L
260	7	370	320	135

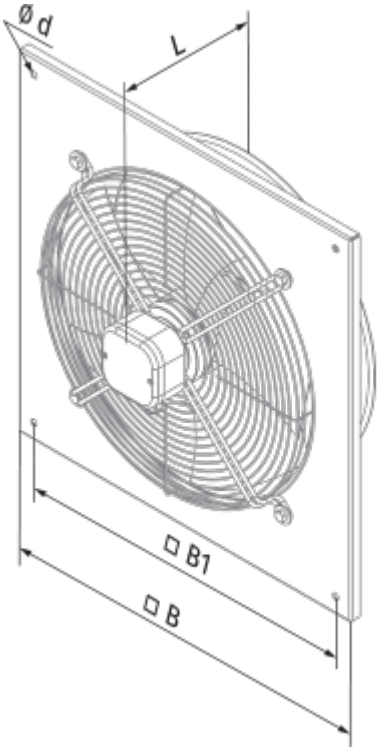
Ø d
L
□ B1
□ B

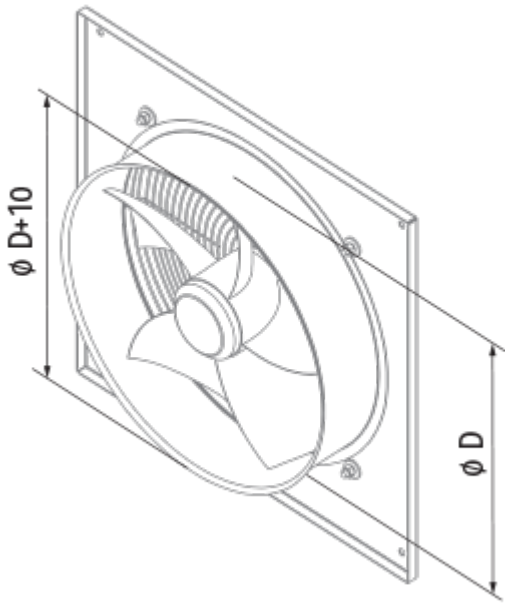
ø D+10
ø D

Ecodesign

Trademark	Blauberg
Model	Axis-Q 250 4E
Type of drive installed	External MSD or VSD
Type of heat recovery system	None
Nominal external pressure (Pa)	55
Maximum external leakage rates (%)	2.7
Static efficiency (%)	8.7
Sound power level (dB(A))	75
Declared typology	NRVU UVU
Effective electric power input (kW)	0.055