

Axis-Q 250 2D

Wall-mounted axial fans

- Impeller type: Axial
- Casing material: Coated steel
- Installation in any position

	Unit of measurement	Axis-Q 250 2D	
Phases	-	3	
Maximum supply voltage	V	400	
Minimum supply voltage	V	400	
Power supply frequency	Hz	50	60
Maximum airflow	m³/h	1060	
Weight	kg	4	
Transported air temperature (max)	°C	60	
Transported air temperature (min)	°C	-30	
Ingress protection rating	-	IP24	
Ingress protection rating of the drive	-	IP54	
Impeller material	-	Coated steel	

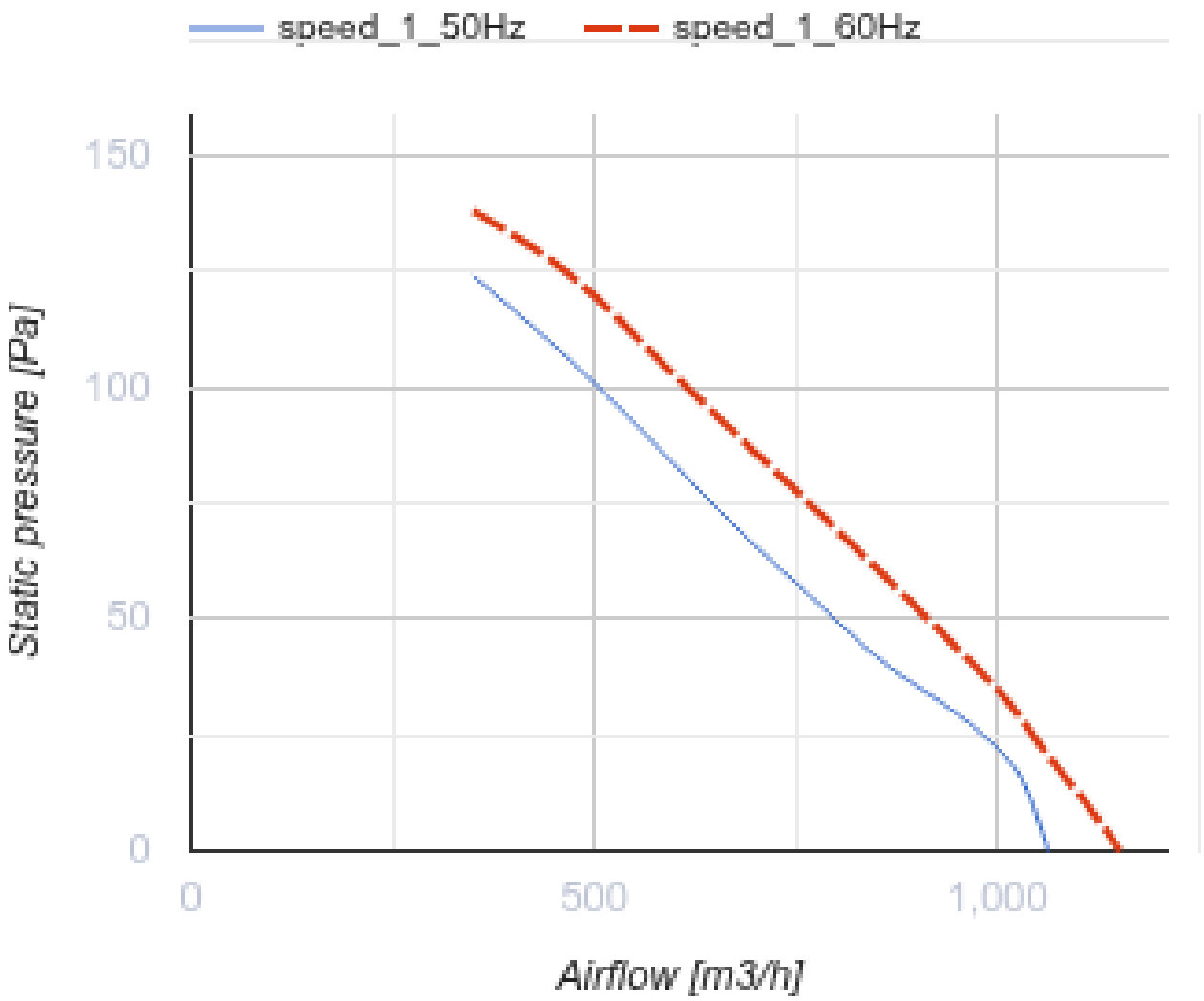
speed_1_50Hz
speed_1_60Hz
150
100
50
0
Static pressure [Pa]
0
500
1,000
Airflow [m3/h]

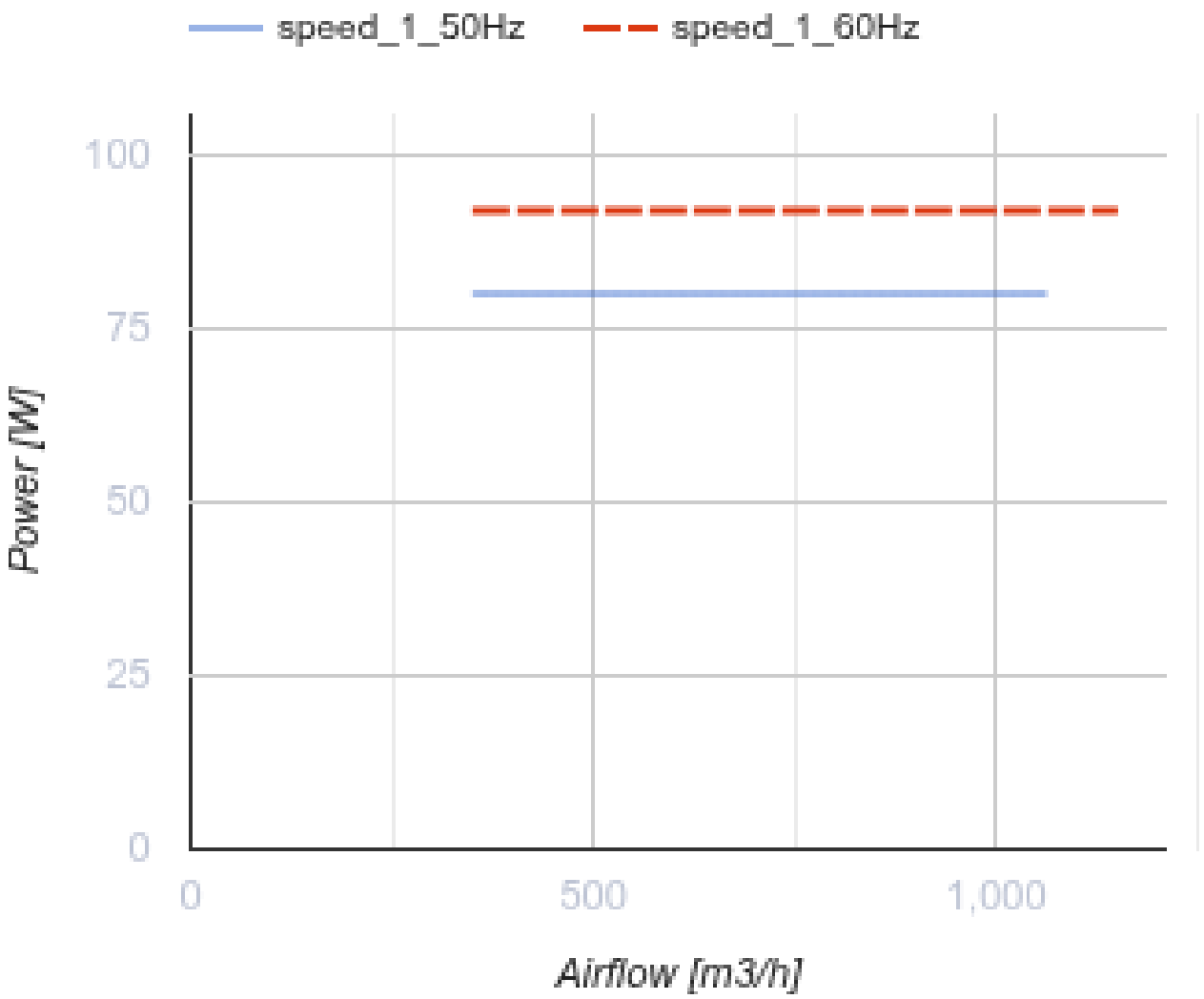

Dimensions

ØD	Ød	B	B1	L
260	7	370	320	135

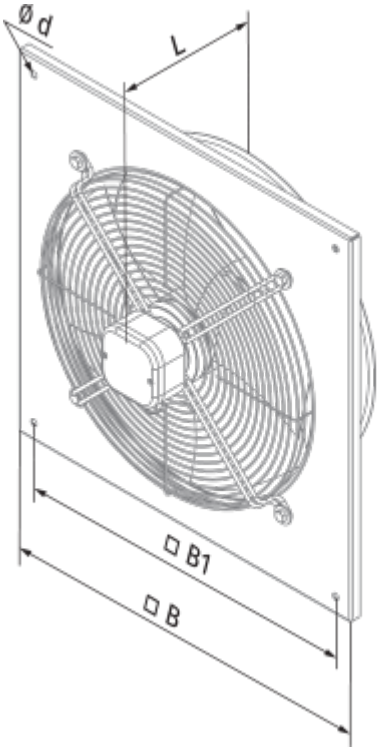
Ø d
L
□ B1
□ B

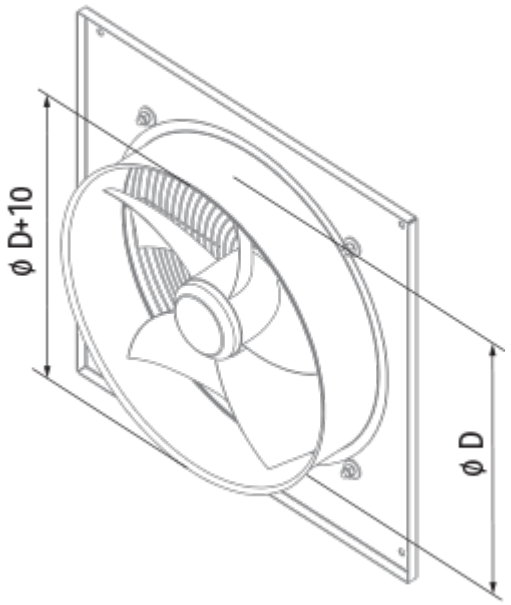
ø D+10
ø D