

# Axis-F 500 6D

Axial inline fans

- Impeller type: Axial
- Casing material: Coated steel
- Installation in any position

| | Unit of measurement | Axis-F 500 6D |
|---|---|---|
| Phases | - | 3 |
| Minimum supply voltage | V | 400 |
| Maximum supply voltage | V | 400 |
| Power supply frequency | Hz | 50 |
| Maximum airflow | m³/h | 4900 |
| Weight | kg | 11 |
| Transported air temperature (max) | °C | 60 |
| Transported air temperature (min) | °C | -30 |
| Ingress protection rating | - | IP24 |
| Ingress protection rating of the drive | - | IP54 |
| Impeller material | - | Coated steel |

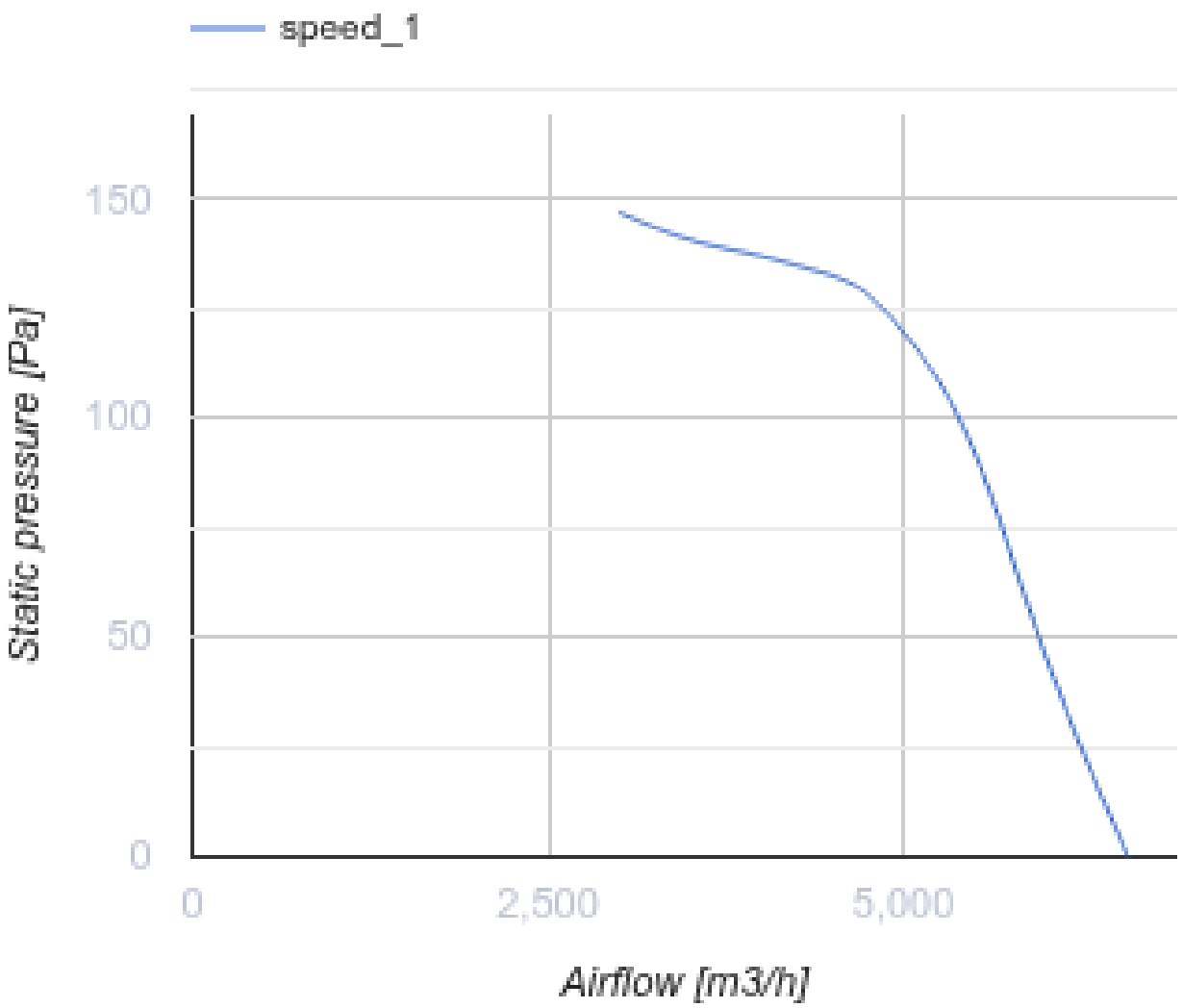
speed_1
150
100
50
0
Static pressure [Pa]
0
2,500
5,000
Airflow [m3/h]

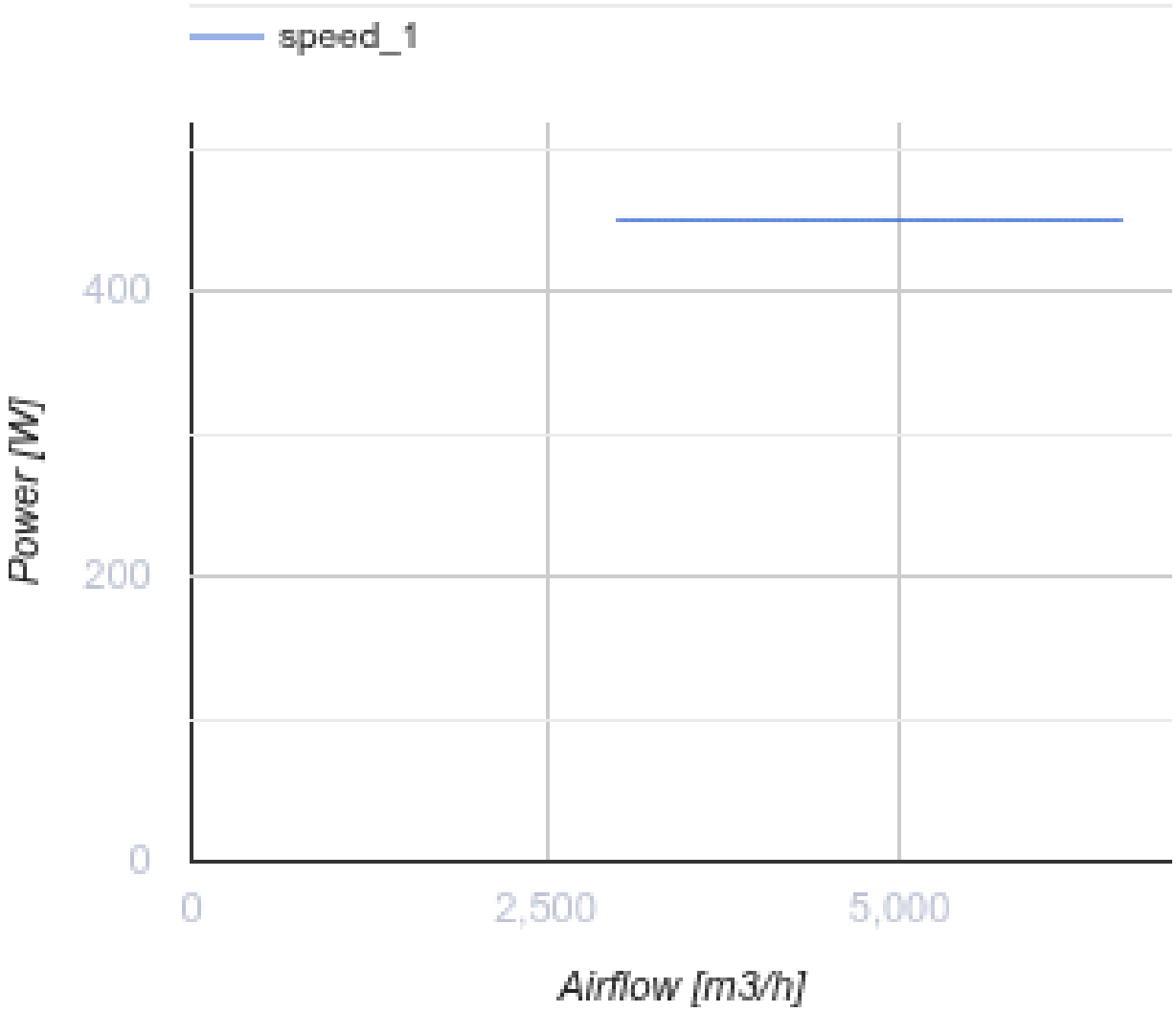


## Dimensions

| ØD | ØD1 | ØD2 | Ød | B | L |
|---|---|---|---|---|---|
| 515 | 541 | 570 | 9,5 | 600 | 220 |

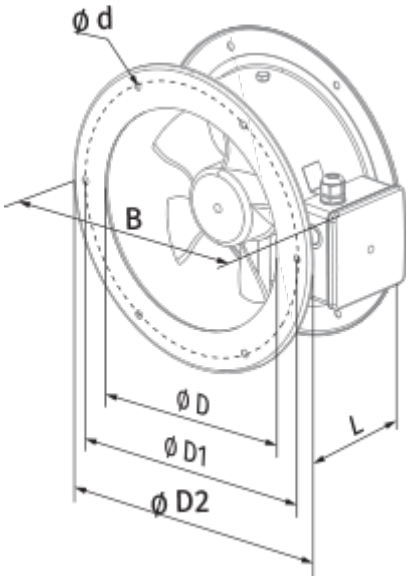
ø d
B
ø D
ø D1
ø D2
L