

Axis-F 450 4D

Axial inline fans

- Impeller type: Axial
- Casing material: Coated steel
- Installation in any position

	Unit of measurement	Axis-F 450 4D
Phases	-	3
Maximum supply voltage	V	400
Minimum supply voltage	V	400
Power supply frequency	Hz	50
Maximum airflow	m^3/h	5280
Weight	kg	9.1
Transported air temperature (max)	°C	60
Transported air temperature (min)	°C	-30
Ingress protection rating	-	IP24
Ingress protection rating of the drive	-	IP54
Impeller material	-	Coated steel

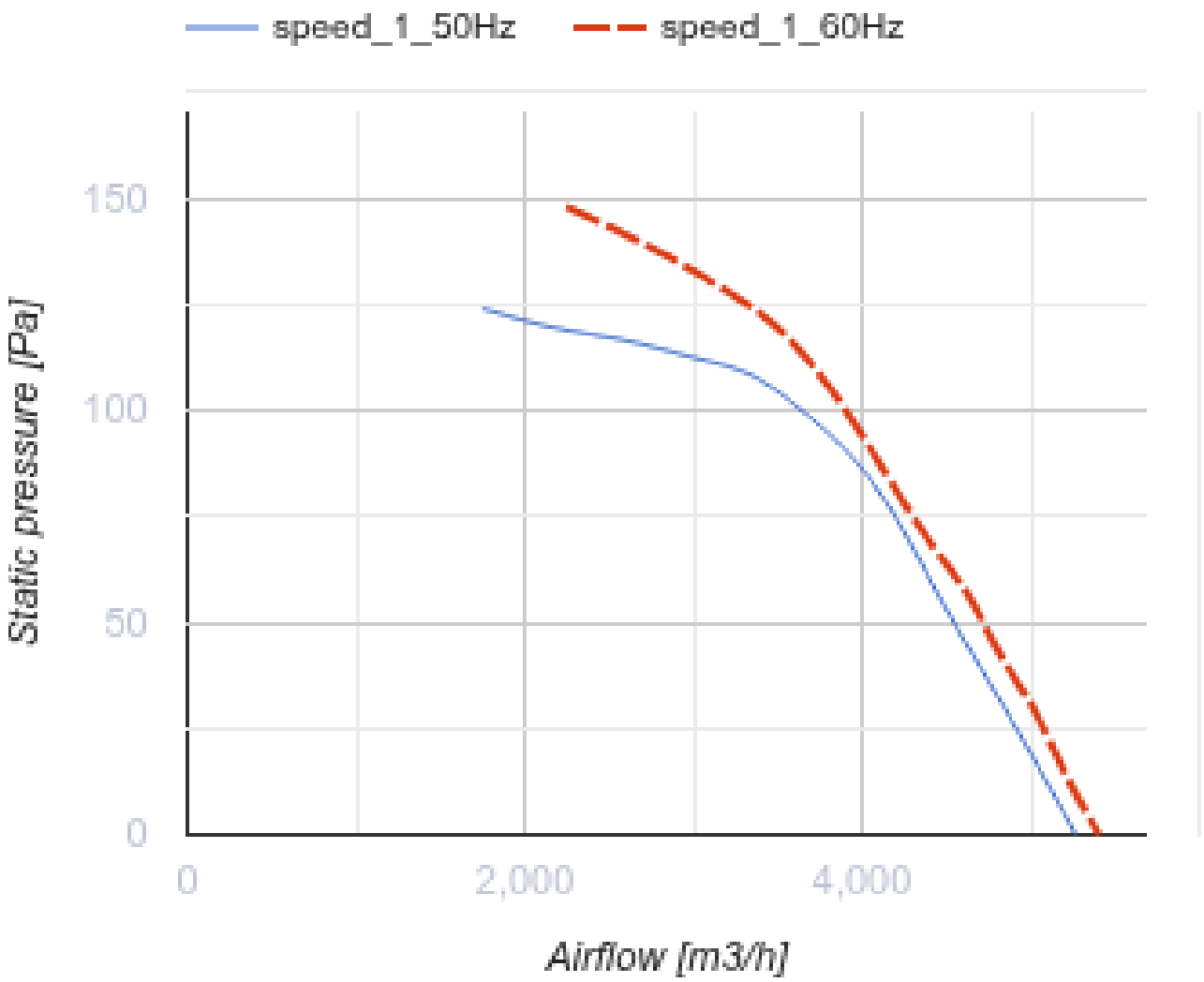
speed_1_50Hz
speed_1_60Hz
150
100
50
0
Static pressure [Pa]
0
2,000
4,000
Airflow [m3/h]

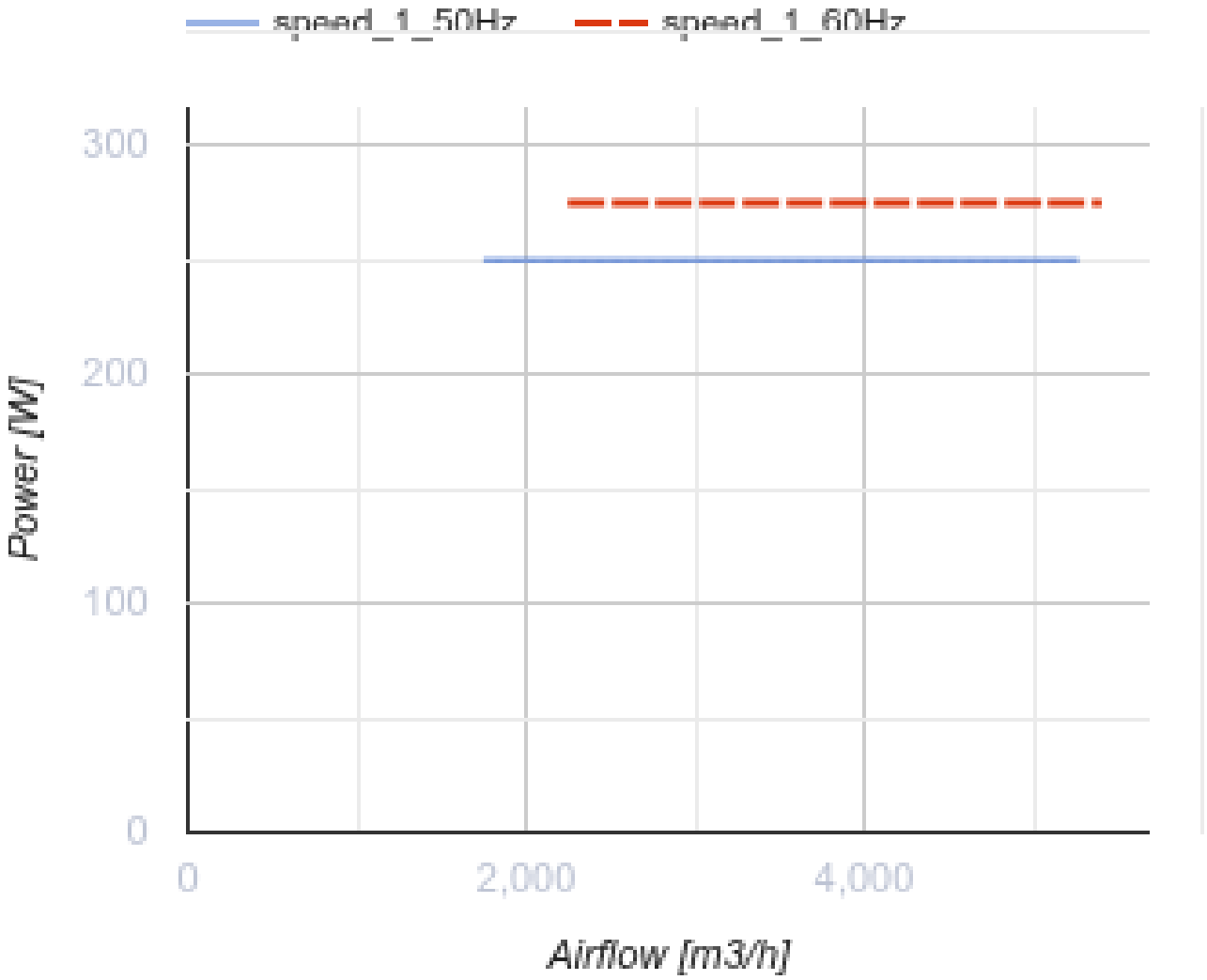

Dimensions

ØD	ØD1	ØD2	Ød	B	L
462	487	515	9,5	550	200

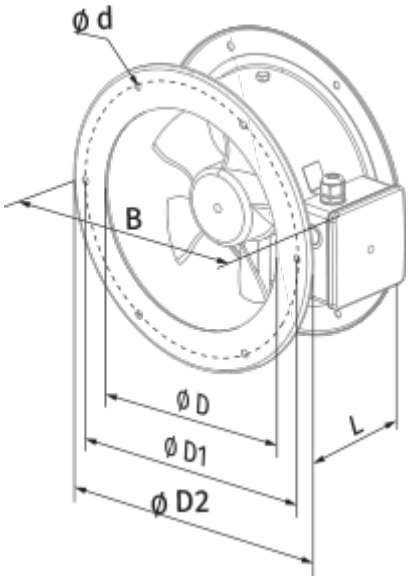
ø d
B
ø D
ø D1
ø D2
L

Ecodesign

Trademark	Blauberg
Model	Axis-F 450 4D
Type of drive installed	External MSD or VSD
Type of heat recovery system	None
Nominal external pressure (Pa)	100
Maximum external leakage rates (%)	2.7
Static efficiency (%)	35
Sound power level (dB(A))	85
Effective electric power input (kW)	0.296
Declared typology	NRVU UVU

Accessories

Speed controllers

Name	Photo	Description
CDT E1.8		Thyristor speed controller