

Axis-F 400 4E

Axial inline fans

- Impeller type: Axial
- Casing material: Coated steel
- Installation in any position

	Unit of measurement	Axis-F 400 4E	
Phases	-	1	
Maximum supply voltage	V	240	
Minimum supply voltage	V	220	
Power supply frequency	Hz	50	60
Maximum airflow	m³/h	3580	
Weight	kg	8.1	
Transported air temperature (max)	°C	60	
Transported air temperature (min)	°C	-30	
Ingress protection rating	-	IP24	
Ingress protection rating of the drive	-	IP54	
Impeller material	-	Coated steel	

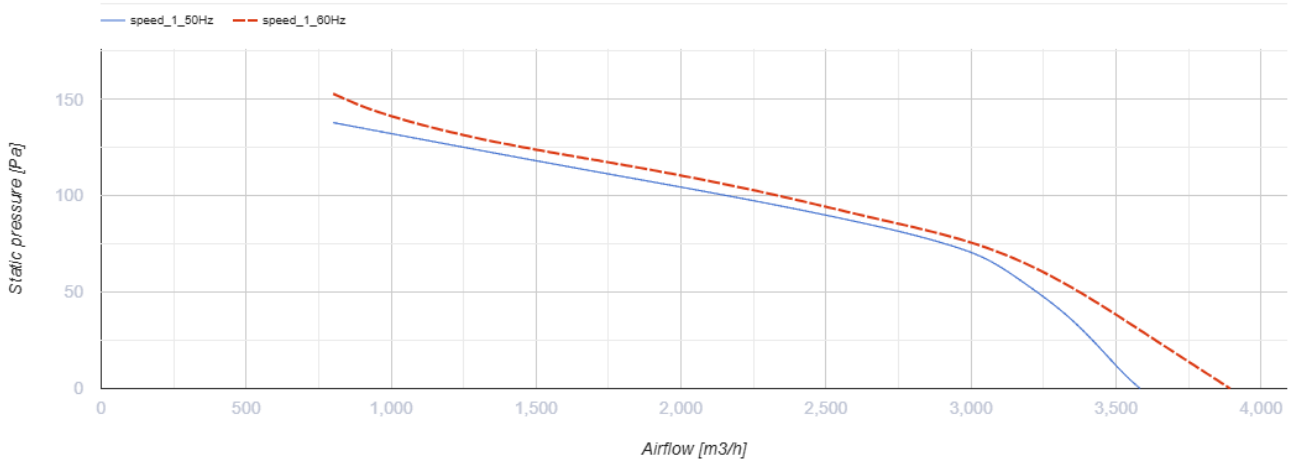

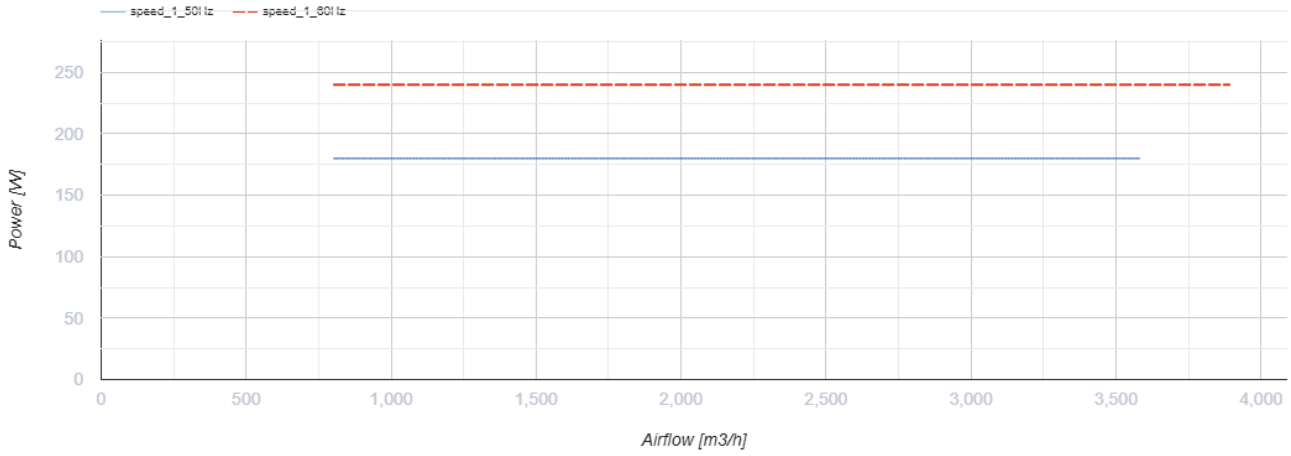

Dimensions

ØD	ØD1	ØD2	Ød	B	L
412	438	465	465	500	170

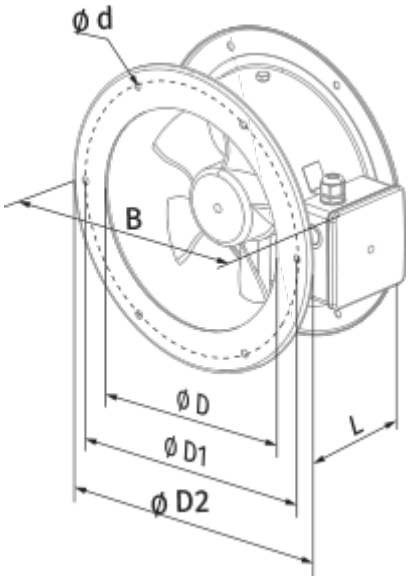
ø d
B
ø D
ø D1
ø D2
L

Ecodesign

Trademark	Blauberg
Model	Axis-F 400 4E
Type of drive installed	External MSD or VSD
Type of heat recovery system	None
Nominal external pressure (Pa)	80
Maximum external leakage rates (%)	2.7
Static efficiency (%)	33.8
Sound power level (dB(A))	83
Effective electric power input (kW)	0.187
Declared typology	NRVU UVU

Accessories

Speed controllers

Name	Photo	Description
CDT E1.8		Thyristor speed controller