

# Axis-F 400 4D

Axial inline fans

- Impeller type: Axial
- Casing material: Coated steel
- Installation in any position

| | Unit of measurement | Axis-F 400 4D | |
|---|---|---|---|
| Phases | - | 3 | |
| Maximum supply voltage | V | 400 | |
| Minimum supply voltage | V | 400 | |
| Power supply frequency | Hz | 50 | 60 |
| Maximum airflow | m³/h | 3740 | |
| Weight | kg | 8.1 | |
| Transported air temperature (max) | °C | 60 | |
| Transported air temperature (min) | °C | -30 | |
| Ingress protection rating | - | IP24 | |
| Ingress protection rating of the drive | - | IP54 | |
| Impeller material | - | Coated steel | |

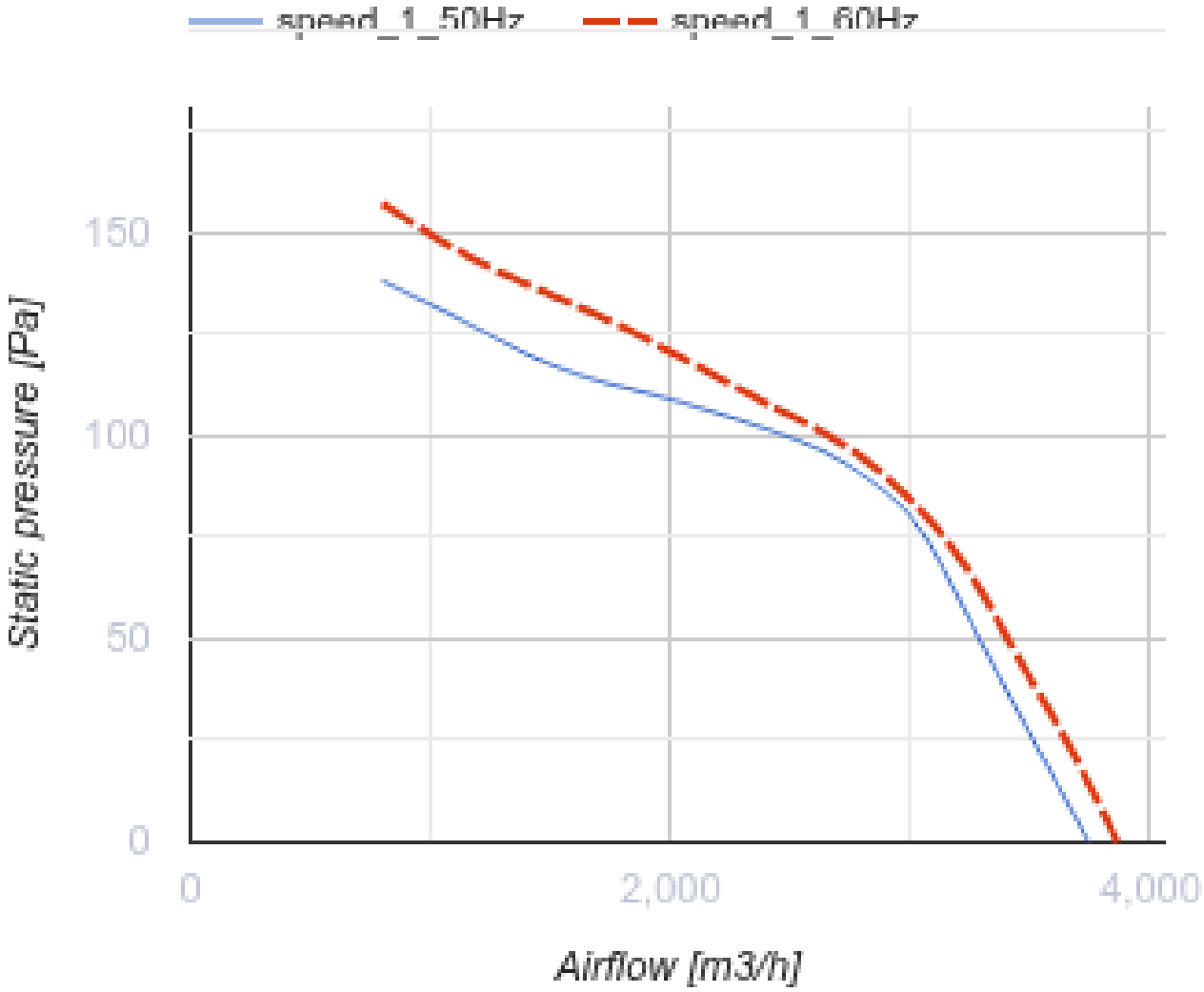
speed_1_50Hz
speed_1_60Hz
Static pressure [Pa]
150
100
50
0
0
2,000
4,000
Airflow [m3/h]

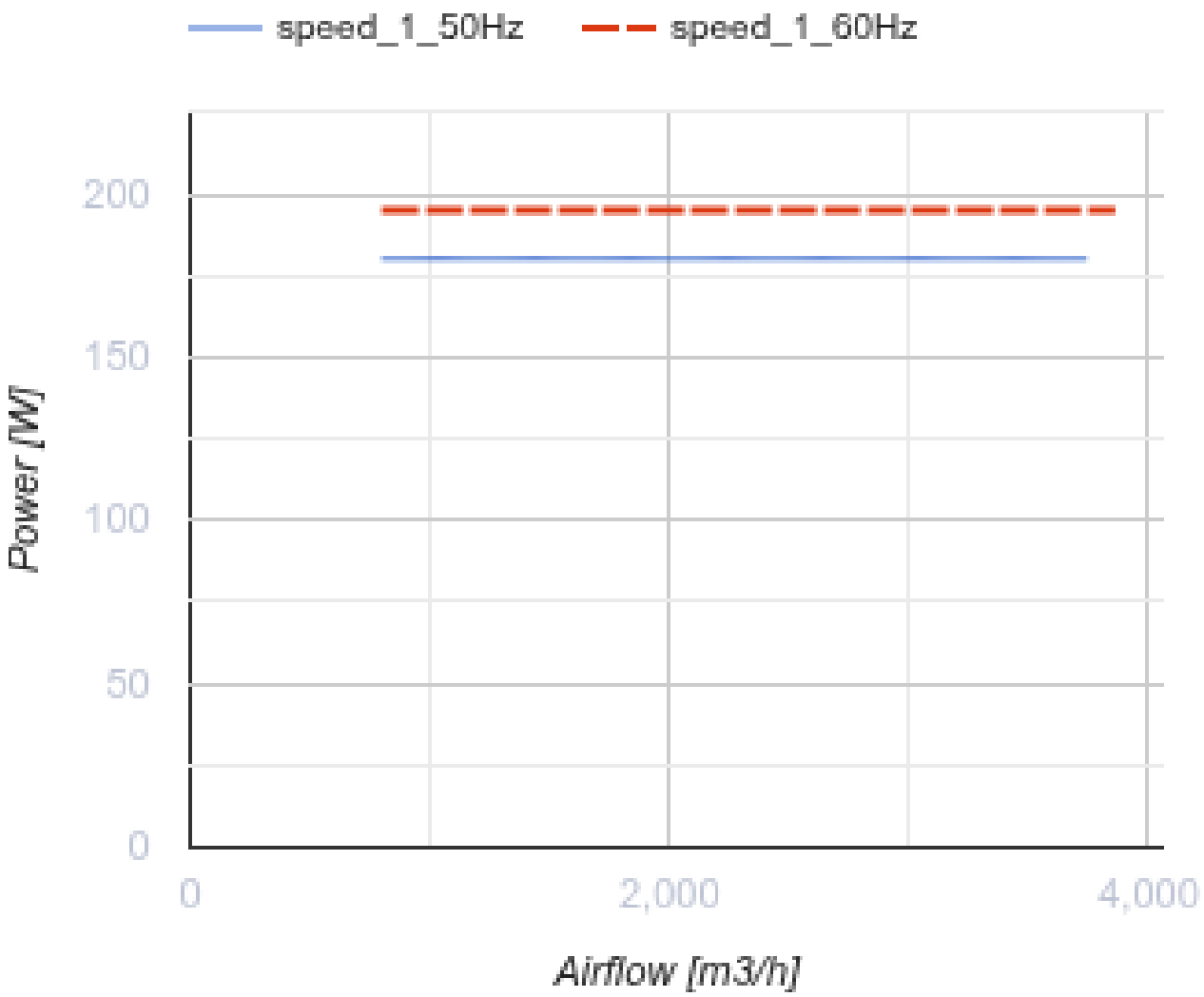


## Dimensions

| ØD | ØD1 | ØD2 | Ød | B | L |
|---|---|---|---|---|---|
| 412 | 438 | 465 | 9,5 | 500 | 170 |

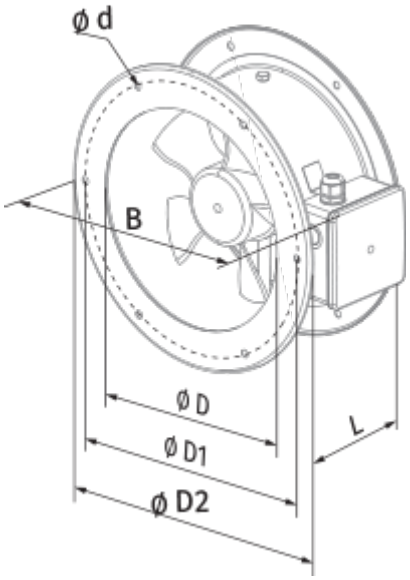
ø d
B
ø D
ø D1
ø D2
L

## Ecodesign

| | |
|---|---|
| Trademark | Blauberg |
| Model | Axis-F 400 4D |
| Type of drive installed | External MSD or VSD |
| Type of heat recovery system | None |
| Nominal external pressure (Pa) | 90 |
| Maximum external leakage rates (%) | 2.7 |
| Static efficiency (%) | 34.3 |
| Sound power level (dB(A)) | 84 |
| Effective electric power input (kW) | 0.209 |
| Declared typology | NRVU UVU |

## Accessories

### Speed controllers

| Name | Photo | Description |
|---|---|---|
| CDT E1.8 |  | Thyristor speed controller |