

# Arena Max 100 e

Axial decorative fan

- Casing material: Plastic
- Backdraft protection: Backdraft damper

| | Unit of measurement | Arena Max 100 e |
|---|---|---|
| Phases | - | 1 |
| Minimum supply voltage | V | 220 |
| Maximum supply voltage | V | 240 |
| Power supply frequency | Hz | 50/60 |
| Maximum airflow | m³/h | 115 |
| Weight | kg | 0.68 |
| Ambient air temperature min | °C | 1 |
| Ambient air temperature max | °C | 45 |
| Ingress protection rating | - | IP24 |
| Impeller material | - | Plastic |

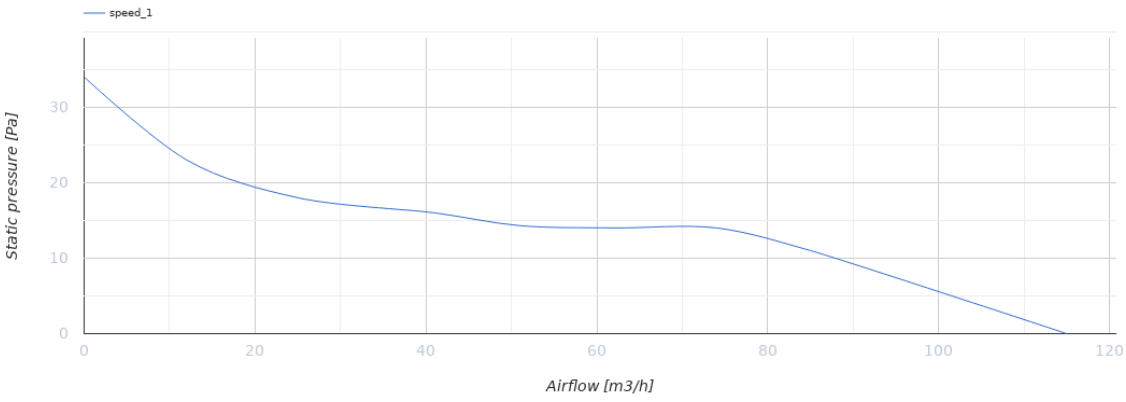

## Dimensions

| Ø D | Ø D1 | L | L1 |
|---|---|---|---|
| 100 | 172 | 121 | 88 |

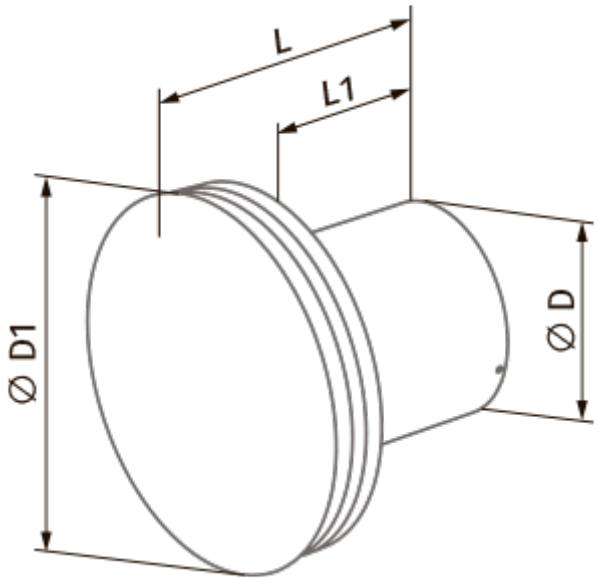


## Accessories

### Speed controllers

| Name | Photo | Description |
|---|---|---|
| CDT E0.5 |  | Thyristor speed controller |