

Arena 100 e2

Axial decorative fan

- Casing material: Plastic

	Unit of measurement	Arena 100 e2
Phases	-	1
Minimum supply voltage	V	220
Maximum supply voltage	V	240
Power supply frequency	Hz	50/60
Maximum airflow	m^3/h	92
Weight	kg	0.6
Ambient air temperature min	°C	1
Ambient air temperature max	°C	45
Ingress protection rating	-	IP24
Impeller material	-	Plastic

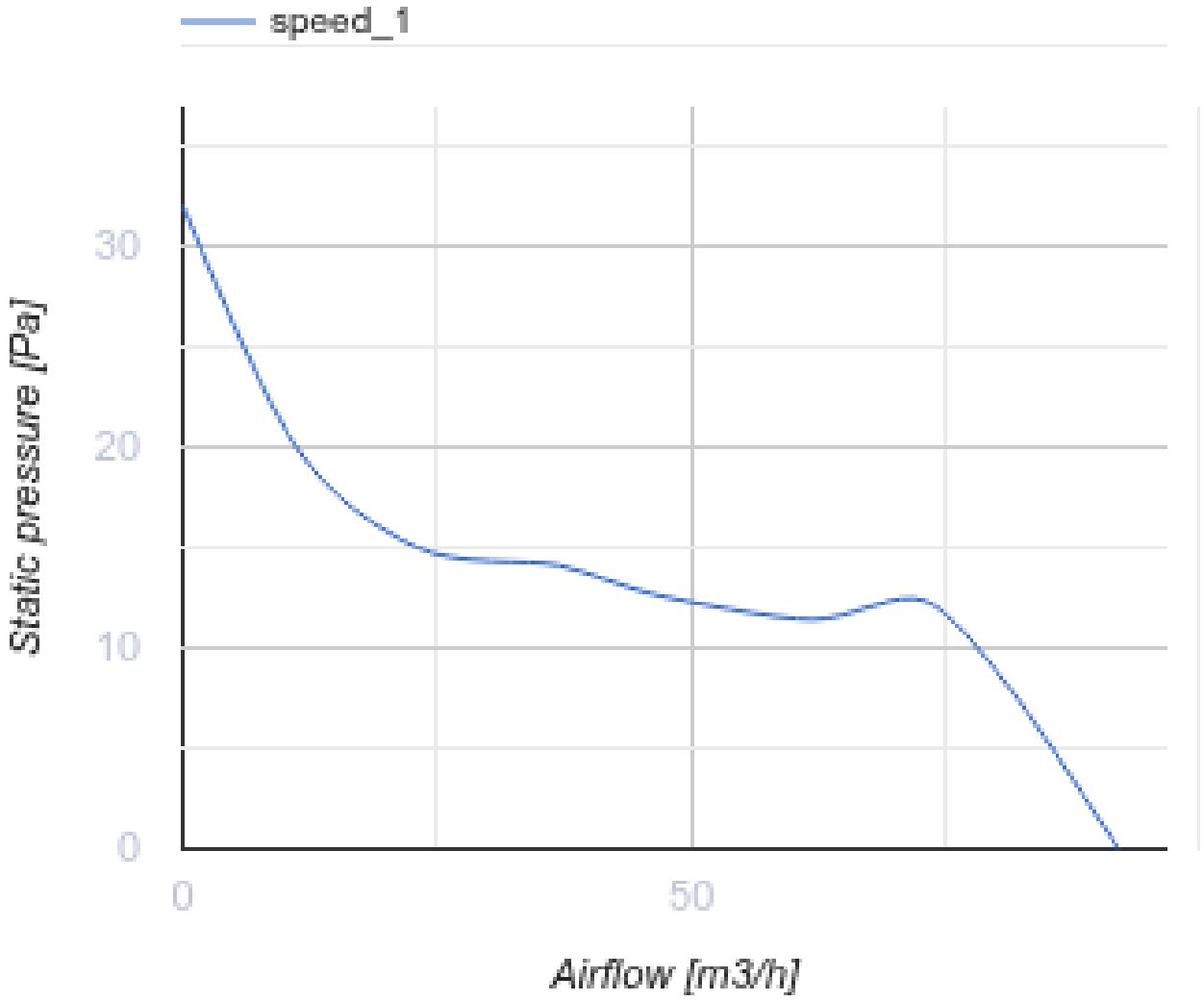

Dimensions

Ø D	Ø D1	L	L1
100	172	121	88

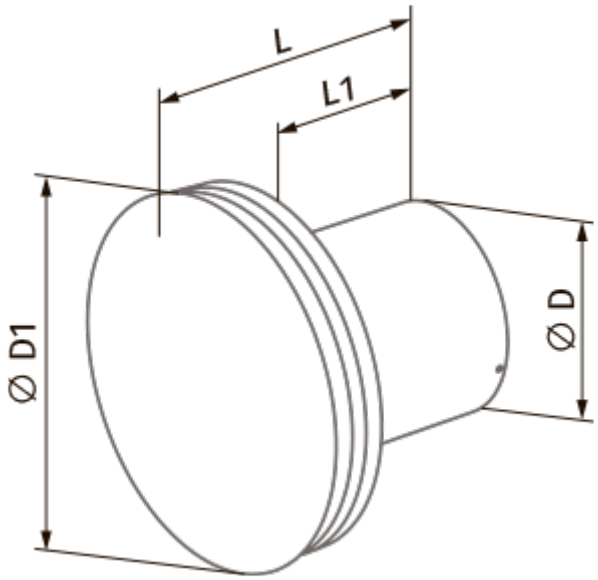

Accessories

Speed controllers

Name	Photo	Description
CDT E0.5		Thyristor speed controller