

# ALB-45

Units for air cooling and heating

| | Unit of measurement | ALB-45 |
|---|---|---|
| Minimum supply voltage | V | 230 |
| Maximum supply voltage | V | 230 |
| Power supply frequency | Hz | 50 |
| Ingress protection rating | - | IP44 |

## Dimensions

| B | B1 | H | H1 | L | L1 | K |
|---|---|---|---|---|---|---|
| 780 | 885 | 710 | 570 | 380 | 300 | G 3/4'' |

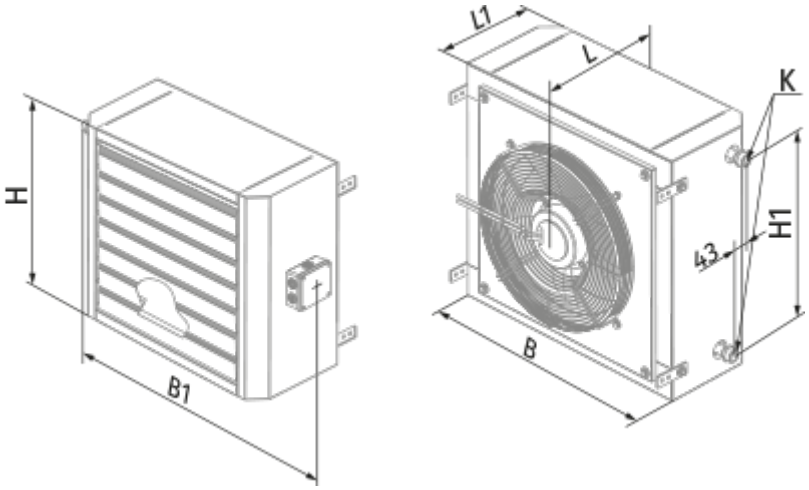


## Accessories

### Temperature controllers

| Name | Photo | Description |
|---|---|---|
| MLC E2 |  | Room temperature regulator |
| MLCD E2 |  | Room temperature regulator |