

Aero Vintage 125 (127-220V/60Hz)

Low-noise axial fan for exhaust ventilation

- Casing material: Plastic
- Backdraft protection: Backdraft damper

	Unit of measurement	Aero Vintage 125 (127-220V/60Hz)
Maximum supply voltage	V	220
Minimum supply voltage	V	127
Power supply frequency	Hz	60
Ingress protection rating	-	IP34
Impeller material	-	Plastic

Dimensions

a	b	c	Ø d	e
168	144	97	125	30

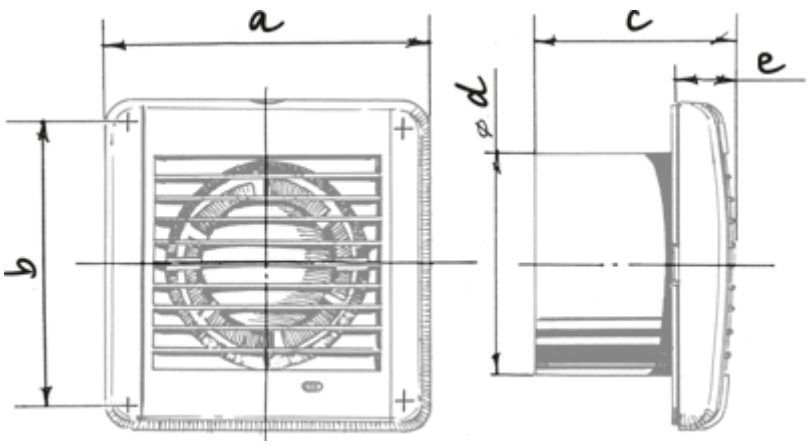
a
b
c
e
d
ø