


# Aero Vintage 100 IR

Low-noise axial fan for exhaust ventilation

- Casing material: Plastic
- Backdraft protection: Backdraft damper
- Motion sensor
- Timer: Turn off timer

| | Unit of measurement | Aero Vintage 100 IR |
|---|---|---|
| Minimum supply voltage | V | 220 |
| Maximum supply voltage | V | 240 |
| Power supply frequency | Hz | 50 |
| Maximum airflow | m³/h | 102 |
| Weight | kg | 0.56 |
| Ambient air temperature min | °C | 1 |
| Ambient air temperature max | °C | 45 |
| Ingress protection rating | - | IP34 |
| Impeller material | - | Plastic |

## Dimensions

| a | b | c | Ø d | e |
|---|---|---|---|---|
| 144 | 122 | 92.5 | 100 | 29.5 |

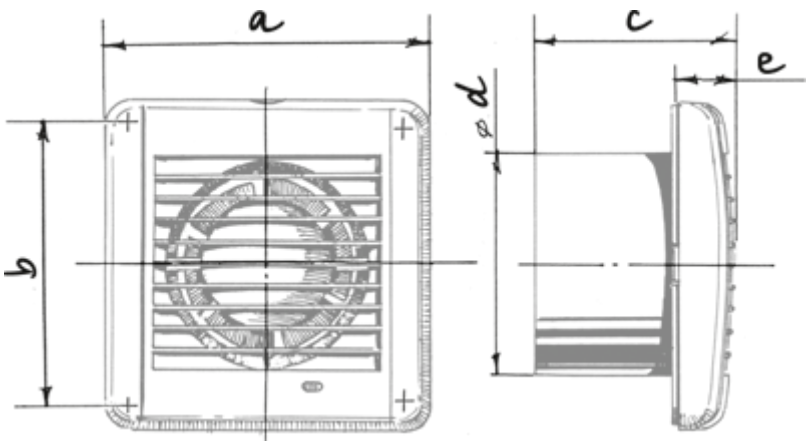
a
b
c
e
d
ø

## Ecodesign

| | | | | | | |
|---|---|---|---|---|---|---|
| Trademark | Blauberg | | | | | |
| Model | Aero Vintage 100 IR | | | | | |
| Specific energy consumption (SEC) (kWh/(m²/a)) | Cold | | Average | | Warm | |
| | 0 | B | 0 | E | 0 | F |
| Type of ventilation unit | Unidirectional | | | | | |
| Type of drive installed | Multi-speed | | | | | |
| Type of heat recovery system | None | | | | | |
| Maximum flow rate (m³/h) | 0 | | | | | |
| Electric power input (W) | 0 | | | | | |
| Reference flow rate (m³/s) | 0 | | | | | |
| Specific power input (SPI) (W/(m³/h)) | 0 | | | | | |
| Control typology | Manual control | | | | | |
| Maximum external leakage rates (%) | 0 | | | | | |
| Declared typology | RVU UVU | | | | | |
| Sound power level (dB(A)) | 0 | | | | | |
| The annual electricity consumption (AEC) (kWh/a) | Cold | | Average | | Warm | |
| | 0 | | 0 | | 0 | |
| The annual heating saved (AHS) (kWh/a) | Cold | | Average | | Warm | |
| | 0 | | 0 | | 0 | |