

Aero Still Chrome 150 H

Extract fan for low-noise applications

- Casing material: Plastic
- Backdraft protection: Backdraft damper
- Humidity sensor
- Timer: Turn off timer

	Unit of measurement	Aero Still Chrome 150 H
Minimum supply voltage	V	220
Maximum supply voltage	V	240
Power supply frequency	Hz	50
Maximum airflow	m^3/h	254
Ambient air temperature min	°C	1
Ambient air temperature max	°C	40
Ingress protection rating	-	IP34
Impeller material	-	Plastic

Dimensions

a	b	c	Ø d	e
198	170	119	150	30

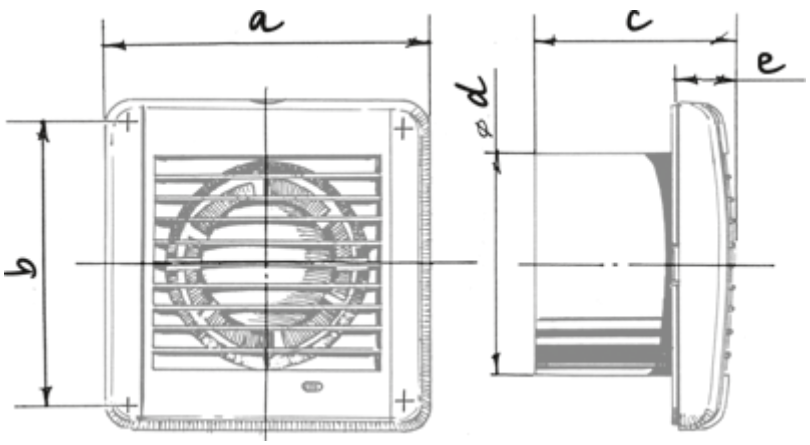

Accessories

Speed controllers

Name	Photo	Description
CDT E1.8		Thyristor speed controller