

Aero Still 125 IR

Extract fan for low-noise applications

- Casing material: Plastic
- Backdraft protection: Backdraft damper
- Motion sensor
- Timer: Turn off timer

	Unit of measurement	Aero Still 125 IR
Minimum supply voltage	V	220
Maximum supply voltage	V	240
Power supply frequency	Hz	50
Maximum airflow	m³/h	158
Ambient air temperature min	°C	1
Ambient air temperature max	°C	40
Ingress protection rating	-	IP34
Impeller material	-	Plastic

Dimensions

a	b	c	Ø d	e
168	144	97	125	30

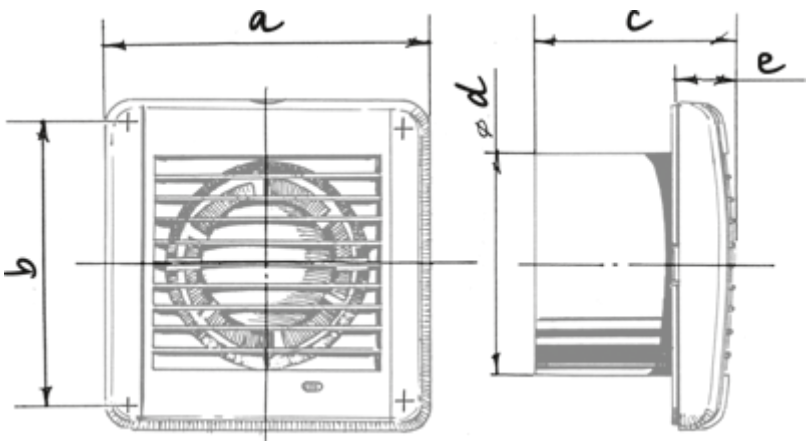
a
b
c
e
d
ø

Ecodesign

Trademark	Blauberg					
Model	Aero Still 125 IR					
Specific energy consumption (SEC) (kWh/(m²/a))	Cold		Average		Warm	
	0	B	0	E	0	F
Type of ventilation unit	Unidirectional					
Type of drive installed	Multi-speed					
Type of heat recovery system	None					
Maximum flow rate (m³/h)	0					
Electric power input (W)	0					
Reference flow rate (m³/s)	0					
Specific power input (SPI) (W/(m³/h))	0					
Control typology	Manual control					
Maximum external leakage rates (%)	0					
Declared typology	RVU UVU					
Sound power level (dB(A))	0					
The annual heating saved (AHS) (kWh/a)	Cold		Average		Warm	
	0		0		0	

Accessories

Speed controllers

Name	Photo	Description
CDT E1.8		Thyristor speed controller