

Aero Chrome 150 T

Low-noise axial fan for exhaust ventilation

- Casing material: Plastic
- Backdraft protection: Backdraft damper
- Timer: Turn off timer

	Unit of measurement	Aero Chrome 150 T
Minimum supply voltage	V	220
Maximum supply voltage	V	240
Power supply frequency	Hz	50
Maximum airflow	m³/h	309
Weight	kg	0.9
Ambient air temperature min	°C	1
Ambient air temperature max	°C	45
Ingress protection rating	-	IP34
Impeller material	-	Plastic

Dimensions

a	b	c	Ø d	e
198	170	119	150	30

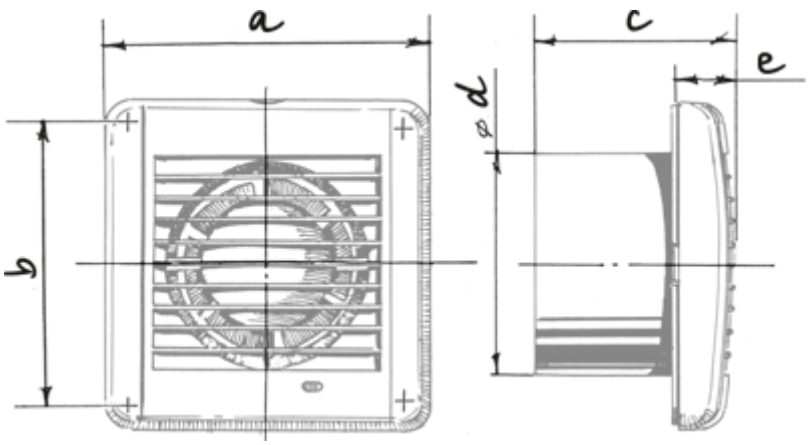
a
b
c
e
d
ø