

Aero Chrome 100

Low-noise axial fan for exhaust ventilation

- Casing material: Plastic
- Backdraft protection: Backdraft damper

	Unit of measurement	Aero Chrome 100
Minimum supply voltage	V	220
Maximum supply voltage	V	240
Power supply frequency	Hz	50
Maximum airflow	m³/h	102
Weight	kg	0.56
Ambient air temperature min	°C	1
Ambient air temperature max	°C	45
Ingress protection rating	-	IP34
Impeller material	-	Plastic

Dimensions

a	b	c	Ø d	e
144	122	92.5	100	29.5

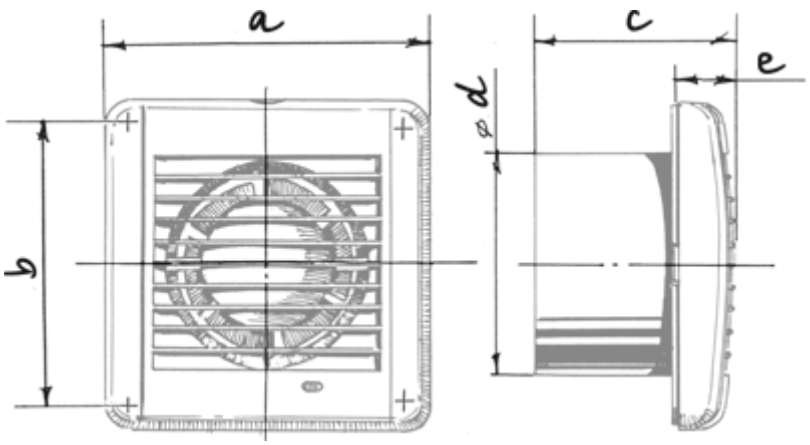
a
b
c
e
d
ø