

Aero 150 T

Low-noise axial fan for exhaust ventilation

- Casing material: Plastic
- Timer: Turn off timer

	Unit of measurement	Aero 150 T
Minimum supply voltage	V	220
Maximum supply voltage	V	240
Power supply frequency	Hz	50
Maximum airflow	m³/h	295
Weight	kg	0.89
Ambient air temperature min	°C	1
Ambient air temperature max	°C	40
Ingress protection rating	-	IP34
Impeller material	-	Plastic

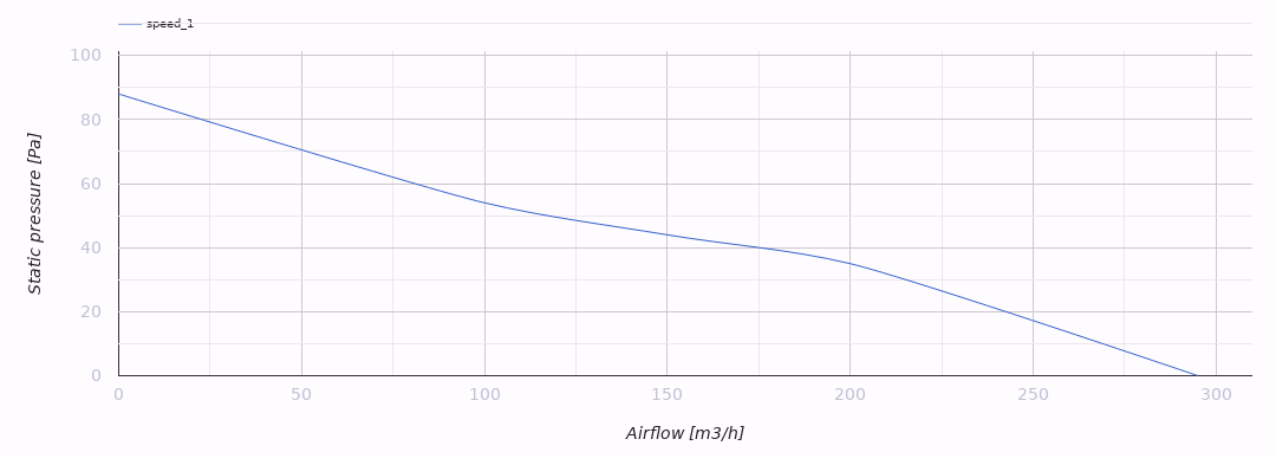

Dimensions

a	b	c	Ø d	e
198	170	119	150	30

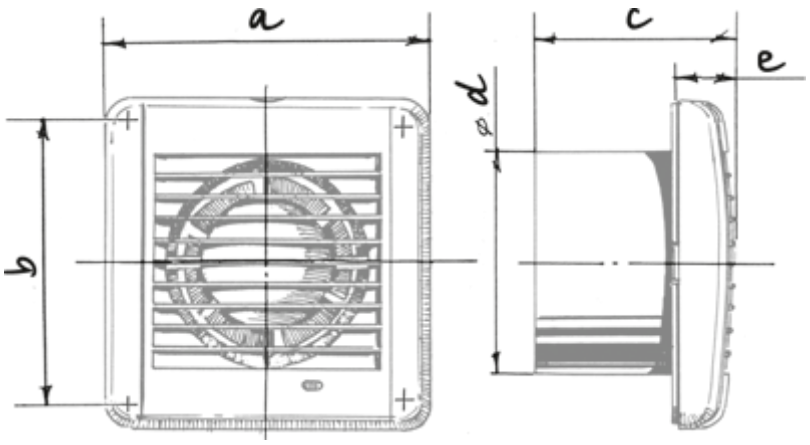

Ecodesign

Trademark	Blauberg					
Model	Aero 150 T					
Specific energy consumption (SEC) (kWh/(m²/a))	Cold		Average		Warm	
	-35.2	A	-17.3	E	-7	F
Type of ventilation unit	Unidirectional					
Type of drive installed	Single speed		Multi-speed			
Type of heat recovery system	None					
Maximum flow rate (m³/h)	309					
Electric power input (W)	24					
Reference flow rate (m³/s)	0.06					
Specific power input (SPI) (W/(m³/h))	0.05					
Control typology	Clock control					
Maximum external leakage rates (%)	2.7					
Declared typology	RVU UVU					
Sound power level (dB(A))	60					
The annual electricity consumption (AEC) (kWh/a)	Cold		Average		Warm	
	58		58		58	
The annual heating saved (AHS) (kWh/a)	Cold		Average		Warm	
	3667		1874		848	