

VENTO ECO STANDARD
VENTO ECO COMFORT

Heat recovery single-room units

BLAUBERG Ventilatoren

CONTENTS

VENTO ECO STANDARD 2

VENTO ECO COMFORT 8

EXTERNAL CONTROLLERS 14
- CT1 Vento Eco 16
- SE1 Vento Eco 17
- SE2 Vento Eco 18
- PS 220/24-20 19
- Mounting boxes 20

VENTO ECO STANDARD

HEAT RECOVERY SINGLE-ROOM UNITS

Features

- Arrangement of efficient energy-saving supply and exhaust single-room ventilation in flats, houses, cottages, social and commercial premises.
- Air purification with optional F7 filter PM2.5 > 99 %.
- Protection from outdoor noise.
- Reducing heat losses caused by ventilation due to heat recovery.
- Humidity balance and regulated air exchange create individually controlled microclimate.

Air flow:
up to 50 m³/h
14 l/s

Heat recovery efficiency:
up to 92 %

Power: from 1.00 W
SFP: from 0.48 W/l/s

Noise level:
from 12 dBA



Design

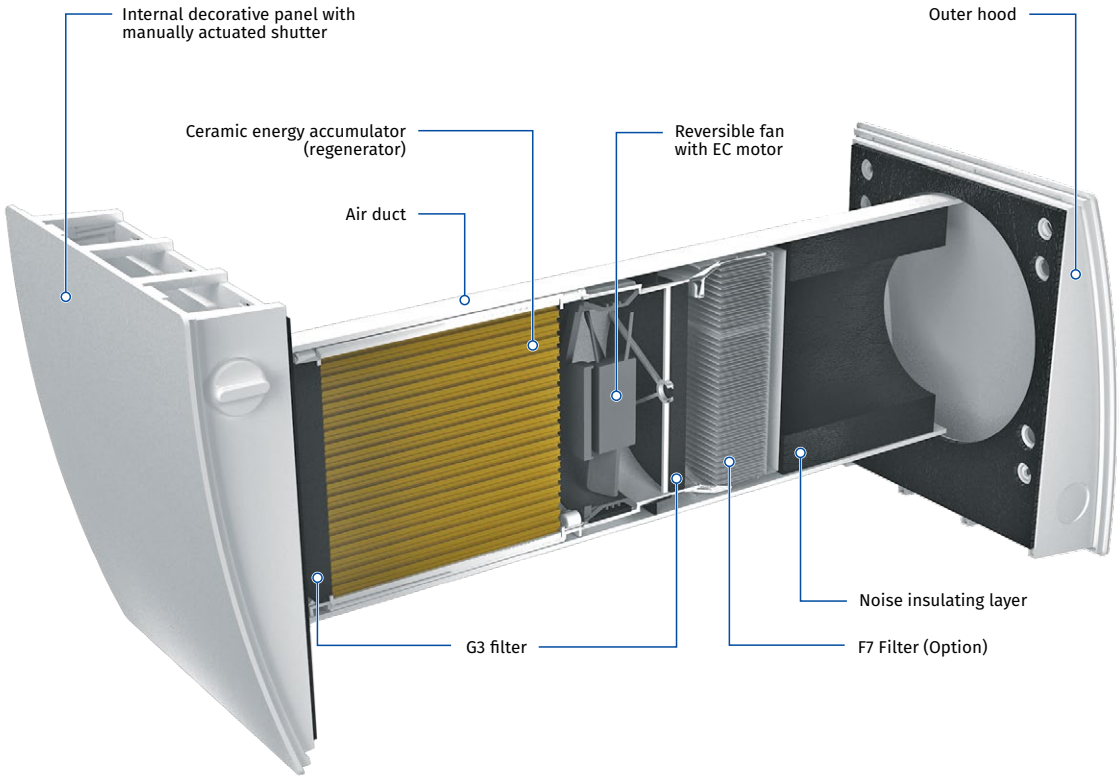

Designation key

Model	Version	Ventilation hood type	Control
Vento Eco	**Standard:** monoblock cartrige **Komfort:** split cartrige	**_:** S11 plastic hood for standard walls **S:** metal hood for thin walls	**_:** without control panel **Pro:** sensor control panel

VENTO ECO STANDARD

Heat and humidity regeneration

UNIT OPERATING LOGIC IN WINTER PERIOD

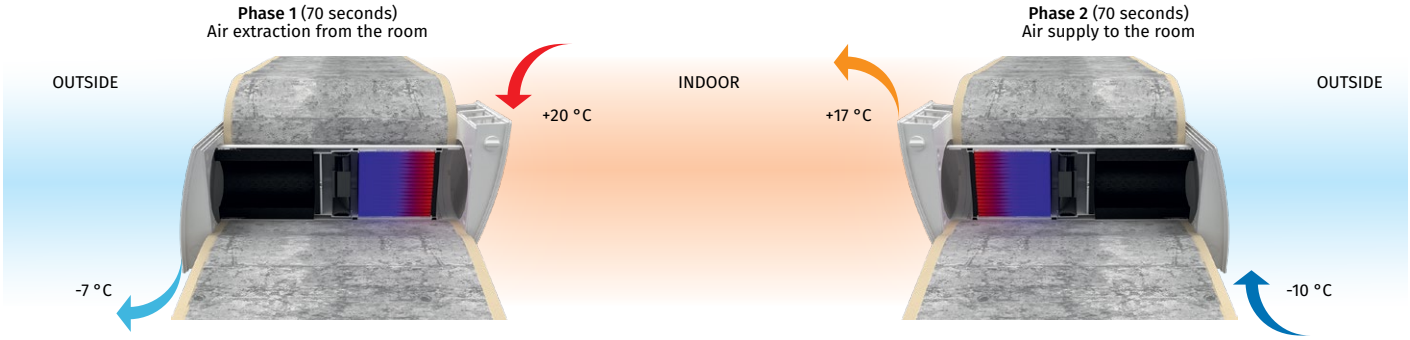

- Warm stale air is extracted from the premise, flows through the ceramic regenerator and transfers its heat energy and moisture to it.
- As the ceramic regenerator gets warmed up, the unit switches to the supply mode.
- Clean cold intake air flows through the regenerator and absorbs accumulated heat and humidity.
- When the ceramic regenerator is cooled down, the unit switches to the extract air mode.

Control

- Control of the unit operation mode is performed by means of the sensor control panel.

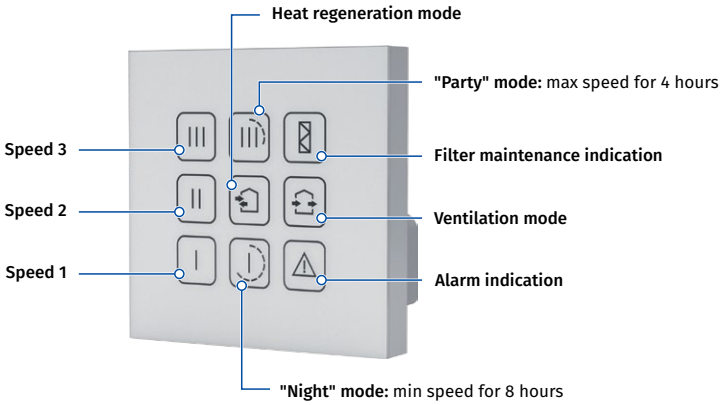

- One control panel with sensor buttons can control up to two units.
- Low voltage (12 V) power supply between control panel and **Vento Eco** units.

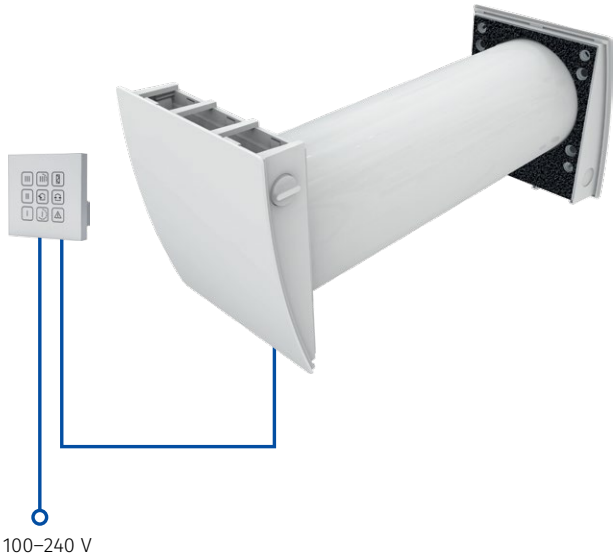

VENTO ECO STANDARD

HEAT RECOVERY SINGLE-ROOM UNITS

Mounting

- The unit is designed for through-the-wall installation inside a prepared hole in an outer wall of the building.
- One unit is able to ventilate a room up to 25 m². For bigger rooms two or more units must be installed.

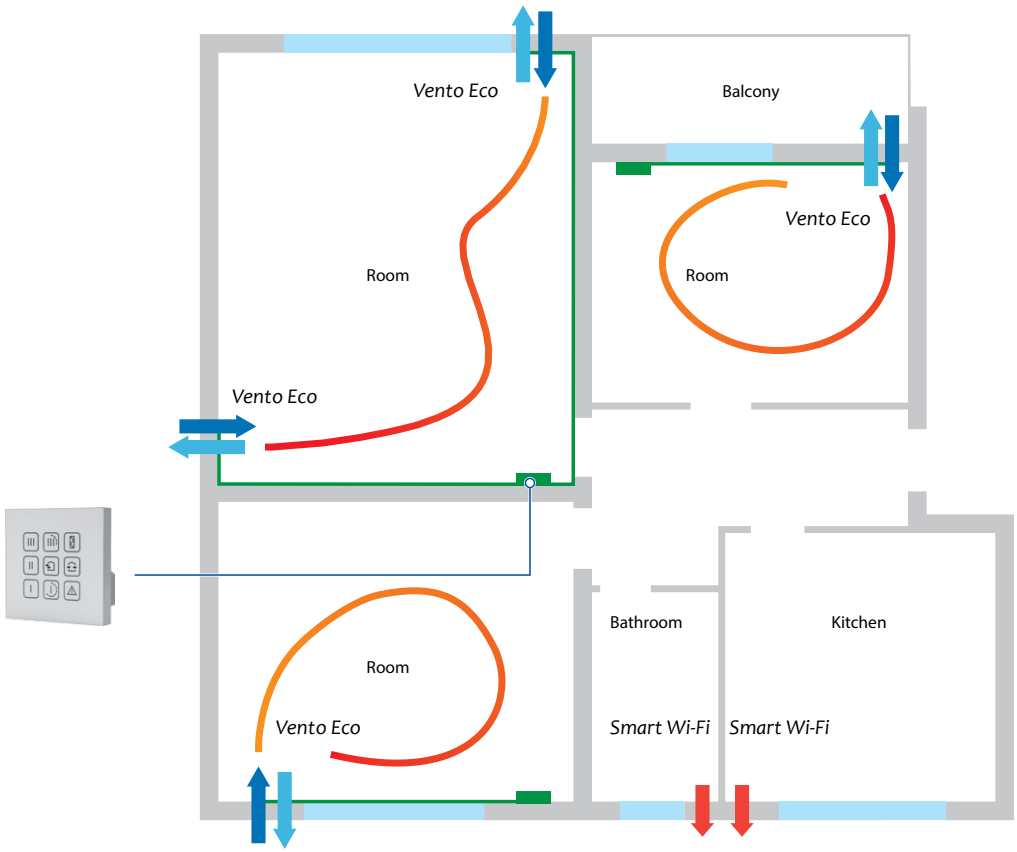

VENTO ECO STANDARD

HEAT RECOVERY SINGLE-ROOM UNITS

Technical data

Parameters	Vento Eco Standard		
Speed	I	II	III
Voltage [V / 50 (60) Hz]		100–240	
Power [W]	1.00	2.10	4.30
Current [A]	0.017	0.025	0.041
RPM [min^{-1}]	915	1555	2330
Air flow in ventilation mode [m³/h (l/s)]	15 (4)	30 (8)	50 (14)
Air flow in heat recovery mode [m³/h (l/s)]	8 (2)	15 (4)	25 (7)
SFP [W/l/s]	0.48	0.50	0.62
Filter		G3 (Option: F8 PM2.5 > 99 %*)	
Transported air temperature [°C]		-20 (-30**)...+40	
Heat recovery efficiency according to DIBt LÜ-A 20 [%]		up to 92	
Outdoor sound pressure attenuation according to DIN EN 20140 [dBA]		41	
Classification of air flow sensitivity to pressure difference variations in accordance with EN 13141-8		S3***	
Indoor/outdoor airtightness classification of the complete unit in accordance with EN 13141-8		D1	
Sound pressure level at 1 m according to ISO 3741: 2004 [dBA]	21	27	29
Sound pressure level at 3 m according to ISO 3741: 2004 [dBA]	12	18	20
Ingress protection rating		IP24	

* maximum air flow 40 m³/h
** with **ZL1 Vento 160/100** cartridge and **AH-8** outer hood applied
*** at III speed

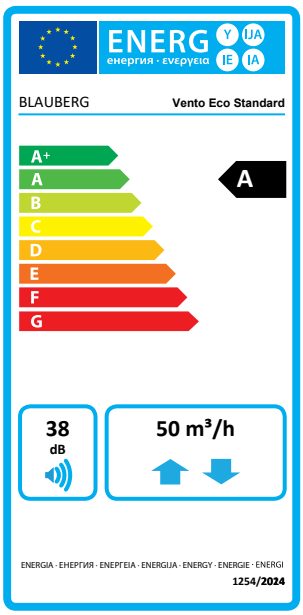

Dimensions [mm]

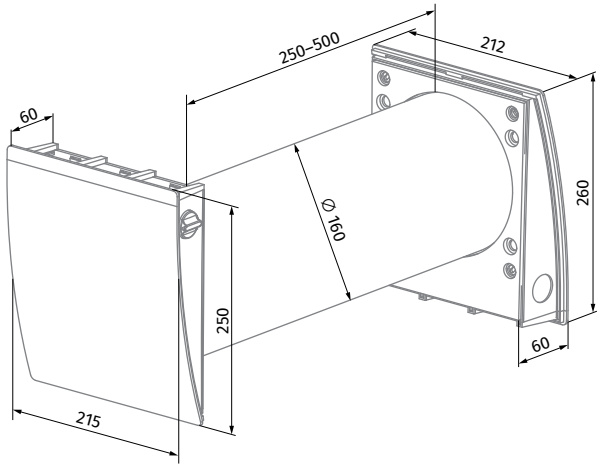

Vento Eco Standard

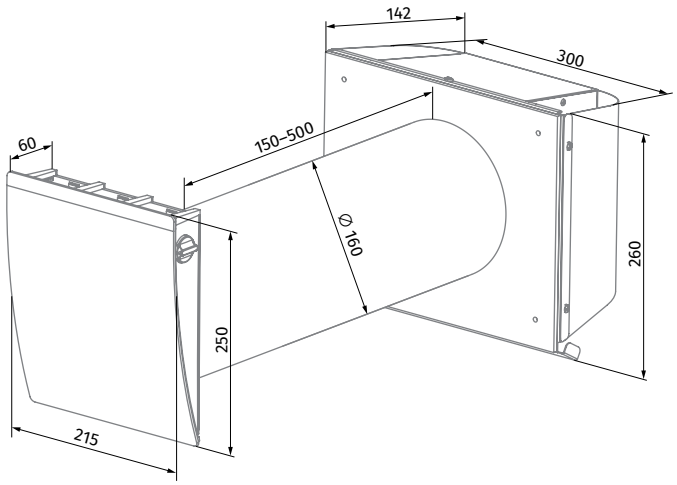

Vento Eco Standard S

VENTO ECO STANDARD

HEAT RECOVERY SINGLE-ROOM UNITS

Accessories

Name		Description
Completion Kit Vento Eco Standard		Indoor grille and cartridge with heat regenerator, fan and G3 filters
Completion Kit Vento Eco Comfort		Indoor grille and cartridge with heat regenerator, fan G3 filters and F7 filter holder
FP2 Vento G3		G3 filters (2 pcs.)
FP2 Vento G4		Coarse filter. Includes: • Plastic filter holder (1 pc.) • G4 filter (1 pc.).
FP2 Vento F7		Coarse filter. Includes: • Plastic filter holder (1 pc.) • F7 filter (1 pc.).
FPC 150x50 G4		G4 coarse filter
FPC 150x50 F7		F7 fine filter. Filtration rate PM2.5 > 70 %
AH-8 white 160		White painted aluminium outer ventilation hood with frost protection for a cold climate
AH-8 chrome 160		Brushed stainless steel outer ventilation hood with frost protection for a cold climate
AH-10 *colour* 160		Plastic outer ventilation hood. Available in colours: white, black, grey, terracotta, brown, vintage
AH-10 chrome 160		Plastic outer ventilation hood with a plate with brushed stainless steel effect finish
AH-11 *colour* 160		Plastic outer ventilation hood. Available in colours: white, black, grey, terracotta, brown, vintage

VENTO ECO STANDARD

Name		Description
AH-S chrome 160		Outer ventilation hood for thin wall made of brushed stainless steel
AH-S white 160		Outer ventilation hood for thin wall made of stainless steel, painted white
PP 160/0.5		Outer ventilation hood for mounting from inside
KIT BlauPlast white 160		Kit for angular mounting with white colour grille (for walls with standard thickness)
KIT BlauPlast chrome 160		Kit for angular mounting with stainless steel outer grille (for walls with standard thickness)
R 160-500		500 mm air duct and plastic foam plug
R 160-700		700 mm air duct and plastic foam plug
SE Vento Eco A50 Pro		Sensor control panel

VENTO ECO COMFORT

HEAT RECOVERY SINGLE-ROOM UNITS

Features

- Arrangement of efficient energy-saving supply and exhaust single-room ventilation in flats, houses, cottages, social and commercial premises.
- Air purification with optional F7 filter PM2.5 > 99 %.
- Protection from outdoor noise.
- Reducing heat losses caused by ventilation due to heat recovery.
- Humidity balance and regulated air exchange create individually controlled microclimate.

Air flow:
up to 50 m³/h
14 l/s

Heat recovery efficiency:
up to 95 %

Power: from 2.00 W
SFP: from 0.79 W/l/s

Noise level:
up to 26 dBA

EC motor · ErP 2016 · ErP 2018



Design

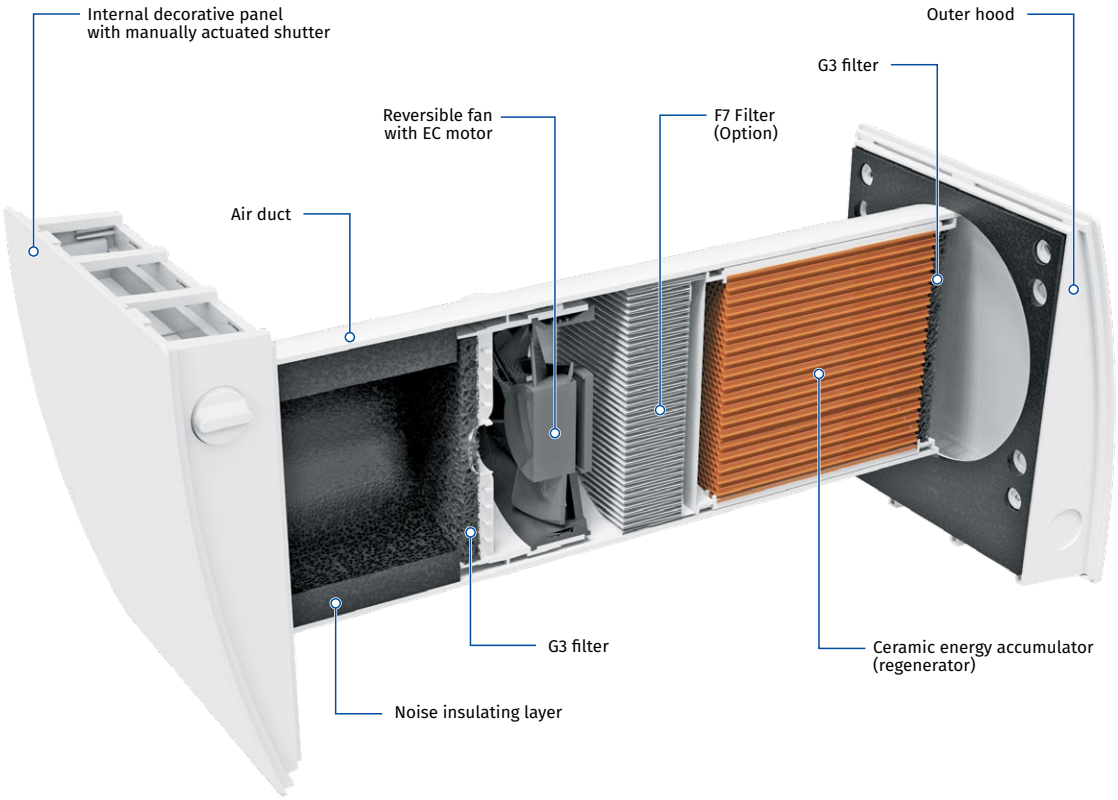

Designation key

Model	Version	Ventilation hood type	Control
Vento Eco	**Standard:** monoblock cartrige **Komfort:** split cartrige	**_:** S11 plastic hood for standard walls **S:** metal hood for thin walls	**_:** without control panel **Pro:** sensor control panel

VENTO ECO COMFORT

HEAT RECOVERY SINGLE-ROOM UNITS

Heat and humidity regeneration

UNIT OPERATING LOGIC IN WINTER PERIOD

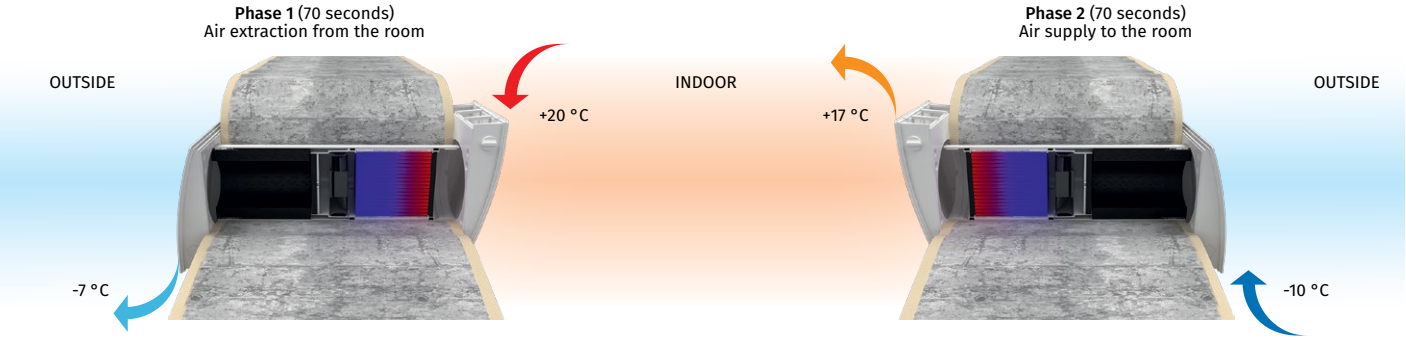

- Warm stale air is extracted from the premise, flows through the ceramic regenerator and transfers its heat energy and moisture to it.
- As the ceramic regenerator gets warmed up, the unit switches to the supply mode.
- Clean cold intake air flows through the regenerator and absorbs accumulated heat and humidity.
- When the ceramic regenerator is cooled down, the unit switches to the extract air mode.

Control

- Control of the unit operation mode is performed by means of the sensor control panel.

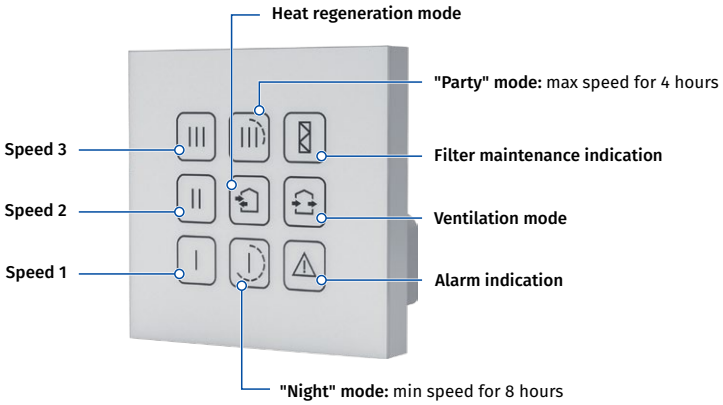

- One control panel with sensor buttons can control up to two units.
- Low voltage (12 V) power supply between control panel and **Vento Eco** units.

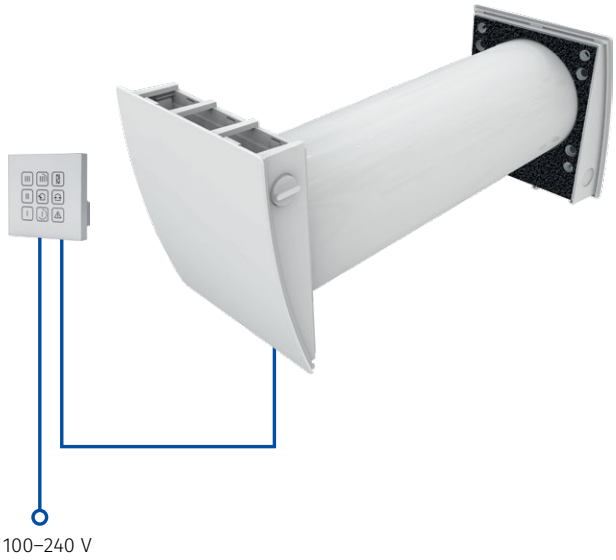

VENTO ECO COMFORT

HEAT RECOVERY SINGLE-ROOM UNITS

Mounting

- The unit is designed for through-the-wall installation inside a prepared hole in an outer wall of the building.
- One unit is able to ventilate a room up to 25 m². For bigger rooms two or more units must be installed.

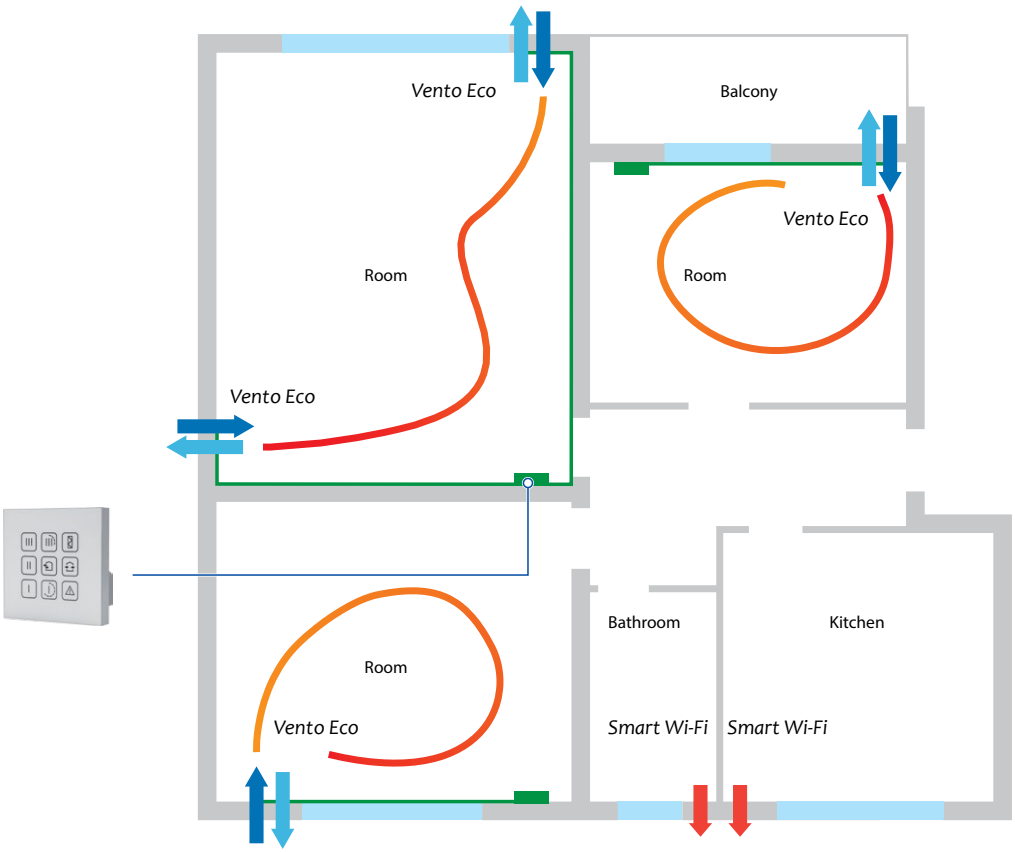

VENTO ECO COMFORT

HEAT RECOVERY SINGLE-ROOM UNITS

Technical data

Parameters	Vento Eco Comfort		
Speed	I	II	III
Voltage [V / 50 (60) Hz]		100–240	
Power [W]	2.0	3.5	5.5
Current [A]	0.030	0.034	0.060
RPM [min^{-1}]	800	1300	1900
Air flow in ventilation mode [m³/h (l/s)]	15 (4)	35 (10)	50 (14)
Air flow in heat recovery mode [m³/h (l/s)]	8 (4)	15 (19)	25 (26)
SFP [W/l/s]	0.96	0.84	0.79
Filter		G3 (Option: F8 PM2.5 > 99 %*)	
Transported air temperature [°C]		-20 (-30**)...+40	
Heat recovery efficiency according to DIBt LÜ-A 20 [%]		up to 95	
Outdoor sound pressure attenuation according to DIN EN 20140 [dBA]		41	
Classification of air flow sensitivity to pressure difference variations in accordance with EN 13141-8		S3***	
Indoor/outdoor airtightness classification of the complete unit in accordance with EN 13141-8		D1	
Sound pressure level at 1 m according to ISO 3741: 2004 [dBA]	10	27	35
Sound pressure level at 3 m according to ISO 3741: 2004 [dBA]	4	19	26
Ingress protection rating		IP24	

* maximum air flow 40 m³/h
** with **ZL1 Vento 160/100** cartridge and **AH-8** outer hood applied
*** at III speed

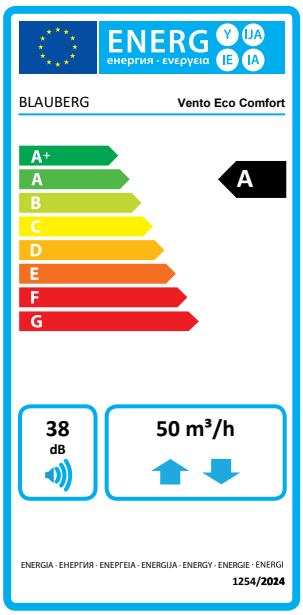

Dimensions [mm]

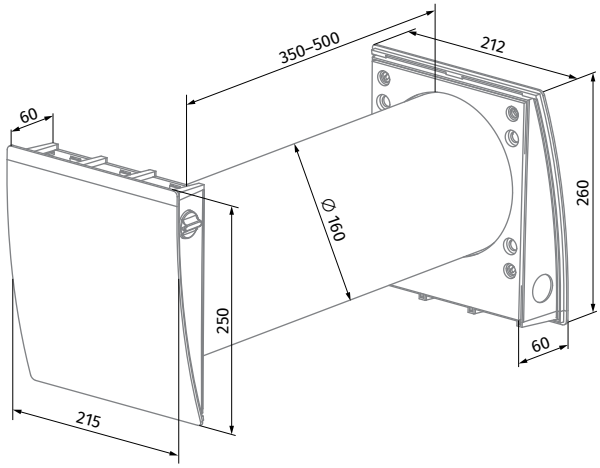

Vento Eco Comfort

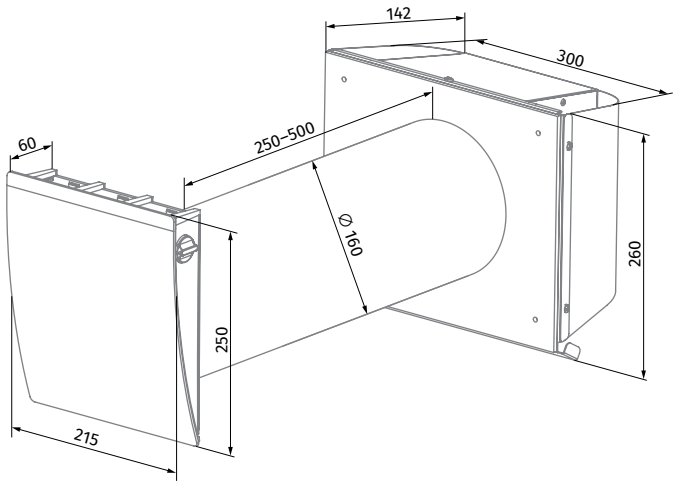

Vento Eco Comfort S

VENTO ECO COMFORT

HEAT RECOVERY SINGLE-ROOM UNITS

Accessories

Name		Description
Completion Kit Vento Eco Standard		Indoor grille and cartridge with heat regenerator, fan and G3 filters
Completion Kit Vento Eco Comfort		Indoor grille and cartridge with heat regenerator, fan G3 filters and F7 filter holder
FP2 Vento G3		G3 filters (2 pcs.)
FP2 Vento G4		Coarse filter. Includes: • Plastic filter holder (1 pc.) • G4 filter (1 pc.).
FP2 Vento F7		Coarse filter. Includes: • Plastic filter holder (1 pc.) • F7 filter (1 pc.).
FPC 150x50 G4		G4 coarse filter
FPC 150x50 F7		F7 fine filter. Filtration rate PM2.5 > 70 %
AH-8 white 160		White painted aluminium outer ventilation hood with frost protection for a cold climate
AH-8 chrome 160		Brushed stainless steel outer ventilation hood with frost protection for a cold climate
AH-10 *colour* 160		Plastic outer ventilation hood. Available in colours: white, black, grey, terracotta, brown, vintage
AH-10 chrome 160		Plastic outer ventilation hood with a plate with brushed stainless steel effect finish
AH-11 *colour* 160		Plastic outer ventilation hood. Available in colours: white, black, grey, terracotta, brown, vintage

VENTO ECO COMFORT

Name		Description
AH-S chrome 160		Outer ventilation hood for thin wall made of brushed stainless steel
AH-S white 160		Outer ventilation hood for thin wall made of stainless steel, painted white
PP 160/0.5		Outer ventilation hood for mounting from inside
KIT BlauPlast white 160		Kit for angular mounting with white colour grille (for walls with standard thickness)
KIT BlauPlast chrome 160		Kit for angular mounting with stainless steel outer grille (for walls with standard thickness)
R 160-500		500 mm air duct and plastic foam plug
R 160-700		700 mm air duct and plastic foam plug
SE Vento Eco A50 Pro		Sensor control panel

EXTERNAL CONTROLLERS

UNIT GROUP CONTROLLER

The group control system for wall-mounted Vento Eco Standard or Comfort is based on the CT1 controller and allows you to connect them to a single system using RS-485

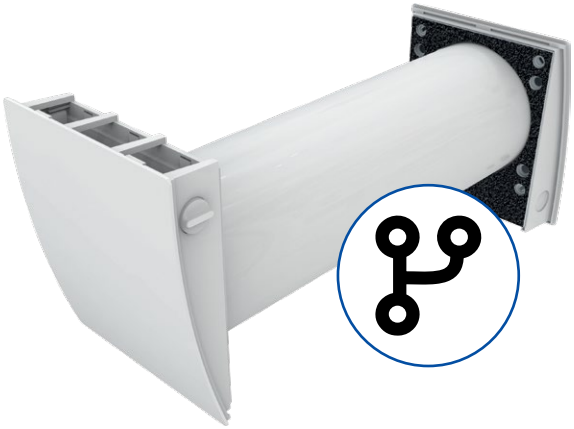

THE SYSTEM INCLUDES:

- **CT1 Vento Eco** unit group controller
- Touchscreen **SE1 Vento Eco** control panel
- Central touchscreen **SE2 Vento Eco** control panel
- Power supply unit 220 V AC/24 V DC **PS 220/24-20, PS 220/24-30**

- A single RS-485-based network can simultaneously support up to 32 devices, including up to 16 controllers, up to 4 SE1 Vento Eco control panels, and 1 SE2 Vento Eco control panel.
- A **CT1** controller is the core of the system. It enables power supply, setting up and controlling up to 6 ventilators, and is compatible with one humidity or CO_2 sensor.
- The unit group control is implemented via **SE1** wired wall-mounted control panel, and the power supply is ensured via a 220/24 V transformer.
- The **SE1** control panel is made out of high-quality white plastic, is equipped with a light indicator of operating status of the group of heat exchangers, and is installed into a standard socket receptacle.
- The **SE2** central control panel can combine and perform centralized control of up to 4 groups of **CT1** controllers. The **SE2** panel has a touch screen, a built-in temperature sensor, weekly timer for each of the 4 controllers and other user settings.

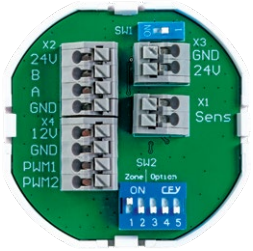

CT1 Vento Eco



SE1 Vento Eco



SE2 Vento Eco



PS 220/24-20



PS 220/24-30

EXTERNAL CONTROLLERS

UNIT GROUP CONTROLLER

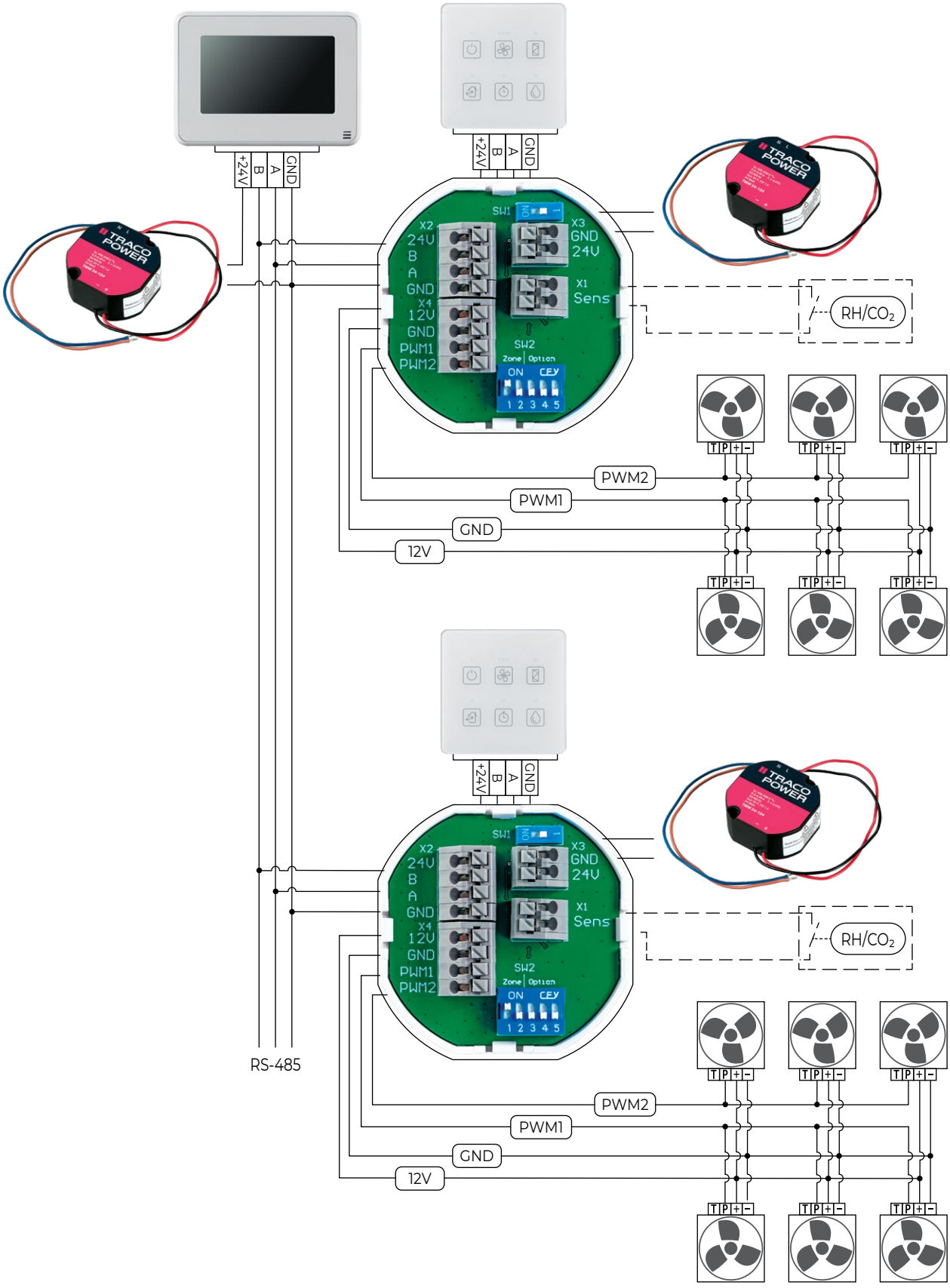

CT1 VENTO ECO

UNIT GROUP CONTROLLER

Features

- Power supply and group control of up to 6 Vento Eco units via RS-485 wired connection up to 20 m long.

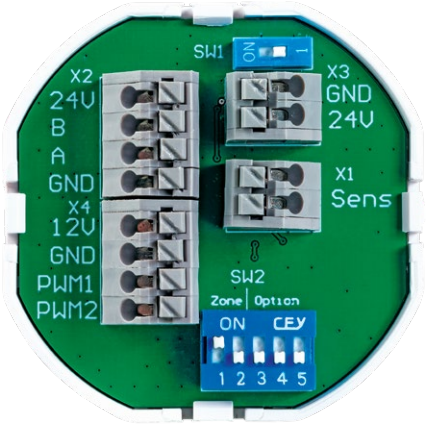

Application

- The controller is designed to operate the following control devices:
  - SE1 Vento Eco control panel;
  - SE2 Vento Eco central control panel;
  - PS 220/24-20 power supply unit.
- The CT1 Vento Eco controller allows to:
  - set up the speed for a corresponding Vento Eco modification;
  - connect an optional wired sensor (NO) RH, CO_2 or others;
  - set up the corresponding zone addressing using a DIP-switch.

Installation

- The controller is installed indoors in standard electrical round mounting boxes. The choice of configuration and connection of Vento Eco devices, as well as control panels SE1, SE2, is performed according to the CT1 Vento Eco controller manual.

Installation options

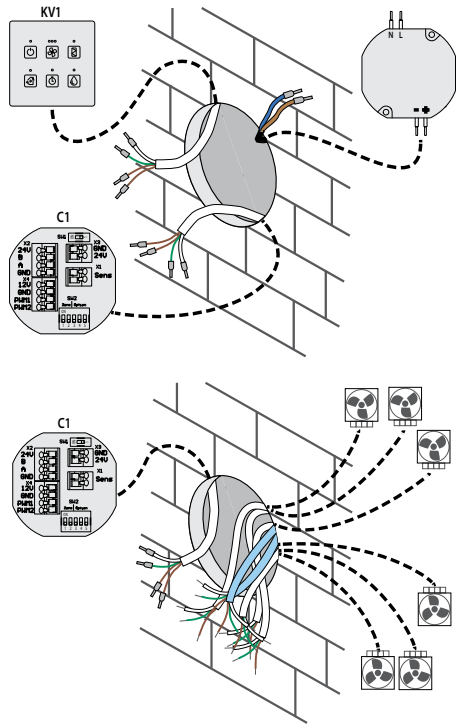

Technical data

Parameters	CT1 Vento Eco
Voltage DC [V]	24 ± 10 %
Maximum total current (with 6 ventilators) for 24 VDC [A]	1.25
Ambient temperature [°C]	+10...+45
Ambient humidity range [%]	10–80 (no cond.)
Weight [kg]	0.06
IP rating	IP20

Dimensions [mm]

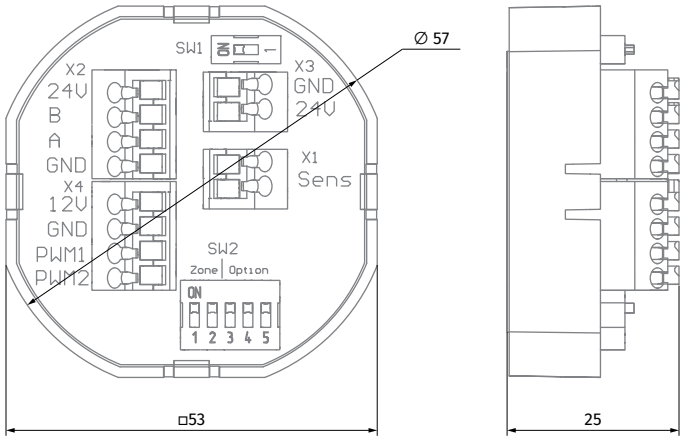

SE1 VENTO ECO

CONTROL PANEL

Features

- The wall-mounted sensor control panel is designed to be used as a part of the control system for domestic decentralized air handling units of the Vento Eco series



Design

- The casing is made of high-quality plastic.
- The responsive touch panel is made of glass and features six control buttons, LED indicators for easy monitoring of the operating mode and a built-in humidity sensor.
- The set speed is displayed on the LED indicator.
- Designed to work with the CT1 controller..

Installation and connection

- It is isntalled on a wall indoors in a box for flush installation. The connection of the control panel is performed according to the unit user's manual.

Technical data

Parameters	SE1 Vento Eco
Voltage DC [V]	12–32
Current per 24 V DC [A]	0.1
Ambient temperature [°C]	+10...+45
Ambient humidity range [%]	10–80 (no cond.)
Weight [kg]	0.06
IP rating	IP20

Dimensions [mm]

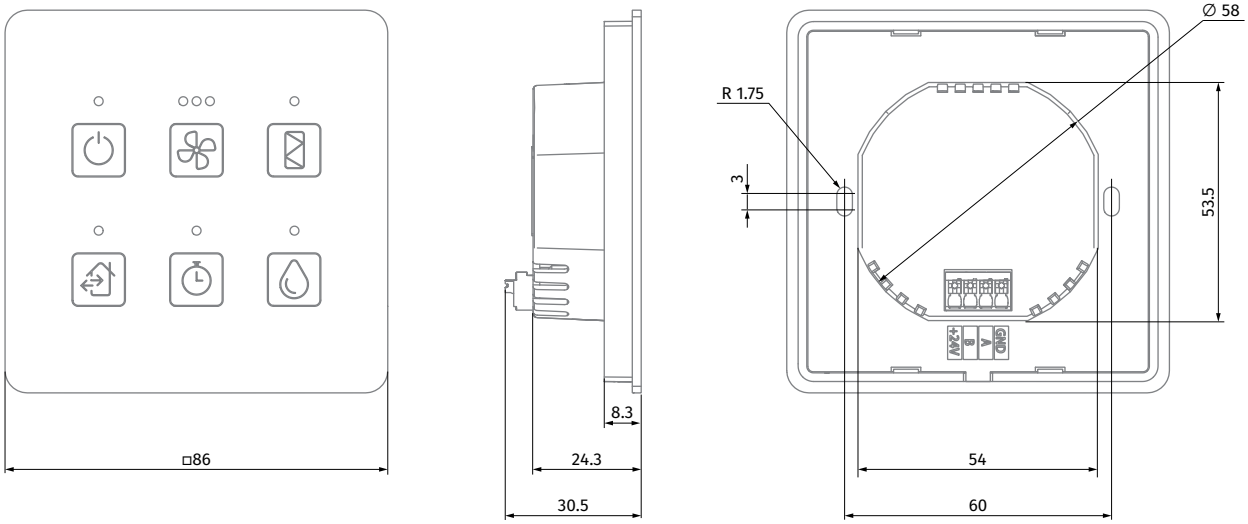

SE2 VENTO ECO

CONTROL PANEL

Features

- The SE2 central control panel with a touch screen is used to control domestic reversible ventilators with energy recovery of the Vento Eco series.



Functions

- Central control of up to 4 groups of Vento Eco units. Each group can simultaneously include up to 6 devices.
- 7 languages available (English, German, French, Danish, Polish, Ukrainian, Russian)
- Individual control of each group of devices.
- Speed switching is individual for each group of Vento Eco devices
- User mode switching.
- Built-in temperature sensor.
- Weekly schedule operation settings are individual for each zone.
- “Sleep” timer.
- “Party” timer.
- Current time.
- Controls the indoor air temperature.
- Filter replacement indicator (timer-based).

Installation

- The connection and installation of the control panel are performed according to the unit user’s manual.

Technical data

Parameters	SE2 Vento Eco
Voltage DC [V]	12–32
Current per 24 V DC [A]	0.1
Power cord type (10 m)	4 x 0.25 mm²
Temperature range [°C]	+10…+45
Humidity range [%]	10–80 % (no condensation)
IP rating	IP20

Dimensions [mm]

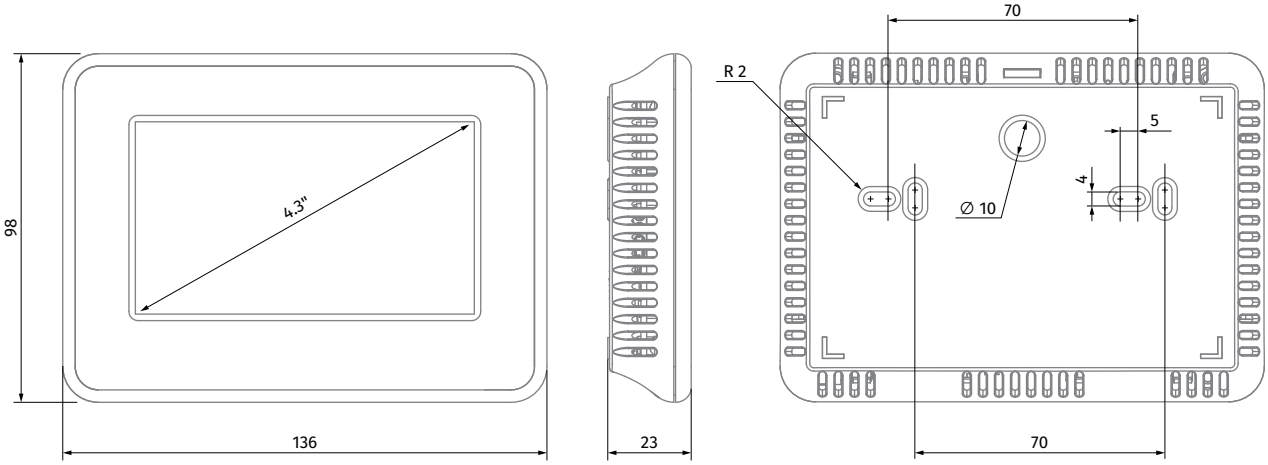

PS 220/24-20

POWER SUPPLY UNIT 220 V AC/24 V DC

Features

- PS 220/24-20, PS 220/24-30 are a fully airtight AC/DC power supply units designed for domestic and industrial application as part of the group control system of Vento Eco series devices based on the CT1 controller and control panels SE1 and SE2.



Design

- The transformer is supplied in a compact dustproof and waterproof casing with an IP68 IP rating. It meets the requirements of IEC/EN 62368-1, IEC/EN 60335-1 and IEC/EN 60601-1 (3rd edition) and is 2xMORR certified.

Installation

- The transformer is designed for indoor installation. The transformers must be installed outside of zones of high humidity and temperature. Flush installation over suspended ceiling or in a wall niche is possible.
- PS 220/24-20(30) is an in-built power supply unit. It is installed in sockets on walls. Connection via loose wiring. Fire safety requirements must be met when installing and operating the unit. Do not install transformers over heating devices.



Technical data

Parameters	PS 220/24–20	PS 220/24–30
Output Power max. [W]	24	36
Nominal Input Voltage AC [V]	100 - 240	
Operational Input Voltage Range	85...264	
Rated input current [A]	0.5–0.25	0.7-0.4
Input Voltage Frequency Range [Hz]	47–63	
Inrush current 115/230 V AC [A]	25/50	
Output voltage DC [V]	24	
Output current [A]	1	1.5
Circuit breaker rating / Characteristic	6 – 16A / Characteristic B or C	
Power factor [λ]	0.47	
Output power derating – Temperature	2%/ K above 50 °C	
Output power derating – Input voltage	2% / V below 100 VAC	
Means of protection	2 x MOPP	
Leakage current (max) [µA]	100	
Touch current (max) [µA]	100	
Network configuration	TN-S, TN-C, TT, IT	
No. of outputs	1	
Efficiency ratio [%]	89	87
Maximum casing temperature [°C]	95	93
Operating temperature [°C]	-20...80	
Storage temperature [°C]	-40...90	
Maximum altitude	5000 m / 50-106 kPa	
External dimensions [mm]	53 x 51 x 24.5	53 x 51 x 33.5
IP rating	IP68	

Dimensions [mm]

	[mm²]	[AWG]
1	0.52	20
2	0.52	20
3	0.52	20
4	0.52	20

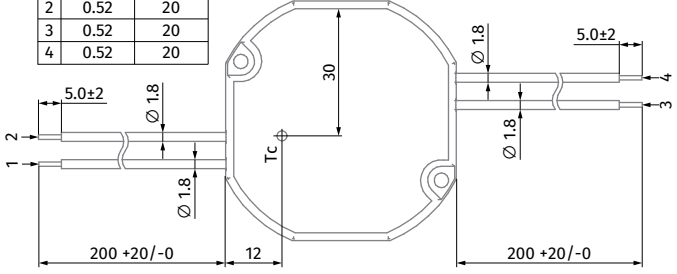

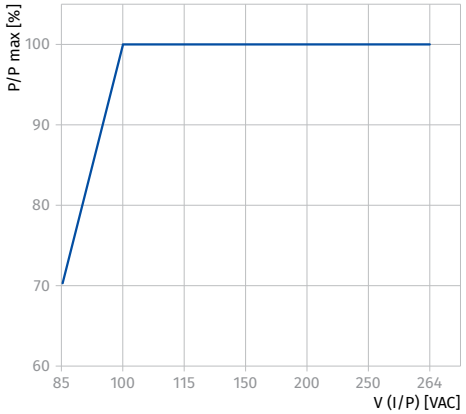

EXTERNAL CONTROLLERS



MKV-6. ROUND MOUNTING BOX

Recessed box for use in masonry with an installation depth of at least 66 mm.

- 4×3 screw caps.
- 2 pre-installed screws for devices.
- Connector with a bayonet lock that connects on both sides.
- 6 combined inlets for pipes ∅ 20 and 25 mm.
- 4 ∅ 20 mm inlets.
- 2 ∅ 14 mm inlets.
- 1 inlet ∅ 20 mm at the base.

Tested according to DIN EN 60670-1, DIN EN 60670-22 and DIN 49073-1.



MKV-7. ROUND MOUNTING BOX WITH EXTRA SPACE UE 66 FOR BRICK WALLS

- Length: 61 mm
- Width: 66 mm
- Material: polypropylene/thermoplastic elastomer
- Fire resistance: 650 °C



MKV-8. ROUND MOUNTING BOX WITH ADDITIONAL SPACE UE 66-L FOR BRICK WALLS, WITH MEMBRANES

- Length: 61 mm
- Width: 66 mm
- Material: polypropylene/thermoplastic elastomer
- Fire resistance: 650 °C



MKV-9. ROUND MOUNTING BOX WITH EXTRA SPACE HE 74-L FOR HOLLOW WALLS

- Height: 154 mm
- Width: 71 mm
- Depth: 77 mm
- Material: polypropylene
- Fire resistance: 850 °C

Blauberg Ventilatoren GmbH
Stäblistraße 6
81477 Munich, Germany
HRB 203341

info@blaubergventilatoren.net
www.blaubergventilatoren.net

Technical changes reserved.
Illustrations and texts are non-binding.

07/2026