

MIXED-FLOW INLINE FAN

Turbo EC eco

EN

USER'S MANUAL

BLAUBERG

CONTENTS

Delivery set 6
Brief description 6
Operation guidelines 7
Designation key 7
Mounting 8
Connection to power mains 10
Control logic 13
Maintenance 14
Troubleshooting 14
Storage and transportation regulations 15
Manufacturer's warranty 16

This user's manual is a main operating document intended for technical, maintenance, and operating staff. The manual contains information about purpose, technical details, operating principle, design, and installation of the Turbo EC eco unit and all its modifications.
Technical and maintenance staff must have theoretical and practical training in the field of ventilation systems and should be able to work in accordance with workplace safety rules as well as construction norms and standards applicable in the territory of the country.

This unit is not intended for use by persons (including children) with reduced physical, sensory or mental capabilities, or lack of experience and knowledge, unless they have been given supervision or instruction concerning use of the unit by a person responsible for their safety.
Children should be supervised to ensure that they do not play with the unit.
This appliance can be used by children aged from 8 years and above and persons with reduced physical, sensory or mental capabilities or lack of experience and knowledge if they have been given supervision or instruction concerning use of the appliance in a safe way and understand the hazards involved.
Cleaning and user maintenance shall not be done by children without supervision.
Children shall not play with the appliance.

CAUTION: In order to avoid a safety hazard due to inadvertent resetting of the thermal cut-out, this unit must not be supplied through an external switching device, such as a timer, or connected to a circuit that is regularly switched on and off by the utility.

Ensure that the unit is switched off from the supply mains before removing the guard.

Precautions must be taken to avoid the back-flow of gases into the room from the open flue of gas or other fuel-burning appliances.

The appliance may adversely affect the safe operation of appliances burning gas or other fuels (including those in other rooms) due to back flow of combustion gases. These gases can potentially result in carbon monoxide poisoning. After installation of the unit the operation of flued gas appliances should be tested by a competent person to ensure that back flow of combustion gases does not occur.

If the supply cord is damaged, it must be replaced by the manufacturer, its service agent, or similarly qualified persons in order to avoid a safety hazard.

Connection to the mains must be made through a disconnecting device, which is integrated into the fixed wiring system in accordance with the wiring rules for design of electrical units, and has a contact separation in all poles that allows for full disconnection under overvoltage category III conditions.

All operations described in this manual must be performed by qualified personnel only, properly trained and qualified to install, make electrical connections and maintain ventilation units.
Do not attempt to install the product, connect it to the mains, or perform maintenance yourself.
This is unsafe and impossible without special knowledge.
Disconnect the power supply prior to any operations with the unit.
All user's manual requirements as well as the provisions of all the applicable local and national construction, electrical, and technical norms and standards must be observed when installing and operating the unit.
Disconnect the unit from the power supply prior to any connection, servicing, maintenance, and repair operations.
Connection of the unit to power mains is allowed by a qualified electrician with a work permit for the electric units up to 1000 V after careful reading of the present user's manual.
Check the unit for any visible damage of the impeller, the casing, and the grille before starting installation.
The casing internals must be free of any foreign objects that can damage the impeller blades.
While mounting the unit, avoid compression of the casing! Deformation of the casing may result in motor jam and excessive noise.
Misuse of the unit and any unauthorised modifications are not allowed.
Transported air must not contain any dust or other solid impurities, sticky substances, or fibrous materials.
Do not use the unit in a hazardous or explosive environment containing spirits, gasoline, insecticides, etc.
Do not close or block the intake or extract vents in order to ensure the efficient air flow.
Do not sit on the unit and do not put objects on it.
The information in this user's manual was correct at the time of the document's preparation.
The Company reserves the right to modify the technical characteristics, design, or configuration of its products at any time in order to incorporate the latest technological developments.
Never touch the unit with wet or damp hands.
Never touch the unit when barefoot.

Do not install or use the product until all construction and finishing work has been completed in the room where it is to be installed.
BEFORE INSTALLING ADDITIONAL EXTERNAL DEVICES, READ THE RELEVANT USER MANUALS.



THE PRODUCT MUST BE DISPOSED SEPARATELY AT THE END OF ITS SERVICE LIFE.
DO NOT DISPOSE THE UNIT AS UNSORTED DOMESTIC WASTE.

DELIVERY SET

Fan	1 pc.
Screws and dowels	4 pcs.
User's manual	1 pc.
Packing box	1 pc.

BRIEF DESCRIPTION

The unit described herein is an axial mixed-flow fan for supply or exhaust ventilation of premises.
The fans for 100, 125 mm air ducts.

	Ø D	B	H	L
Turbo EC 100 eco	96	167	190	246
Turbo EC 125 eco	123	167	190	246

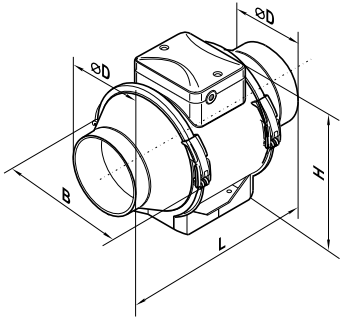

OPERATION GUIDELINES

The fan is rated for connection to single-phase AC 100-240 V 50/60 Hz power mains.
The unit is rated for continuous operation.
The arrow on the fan casing must match the air direction in the system.
Ingress protection rating against access to hazardous parts and water ingress is IPX4.
The unit is rated as a Class II electrical appliance.
The fan is rated for operation at the ambient air temperature from +1 °C up to +40 °C.
The temperature of the transported air is –25...+40 °C.

Attention! It is prohibited to connect the product to a speed controller!

DESIGNATION KEY

Turbo EC 100 eco W

- **W** — **Options:**
  - **T:** timer
  - **US:** speed switch
  - **W:** power cord with plug on
- **eco** — **Engine modification**
  - **eco:** low energy consumption motor
- **100** — **Spigot diameter [mm]**
- **EC** — **Motor type**
- **Turbo** — **Inline fan**

MOUNTING

The fan is designed for horizontal or vertical installation on the floor, on the wall or on the ceiling . The fan can be installed independently or as part of a set with parallel or in-series connection .
While mounting the fan provide extra protection against water ingress, such as:

- For the top mounting: install an outer protecting hood above.
- For any mounting position: connect an air duct on both sides of the fan.

The exhaust spigot must always be connected to the air duct.

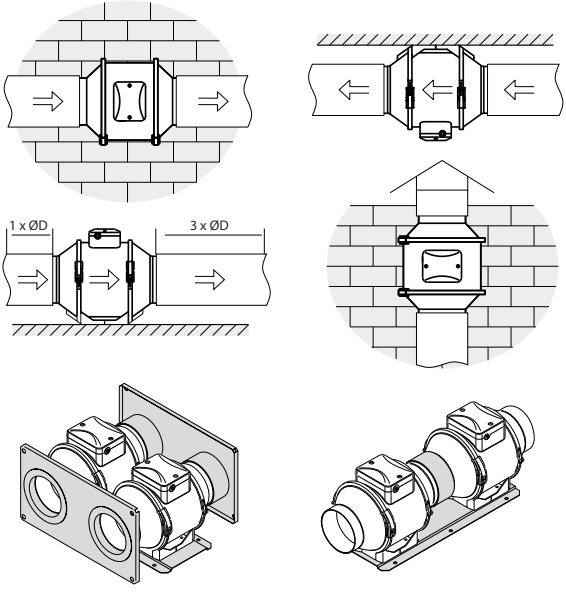

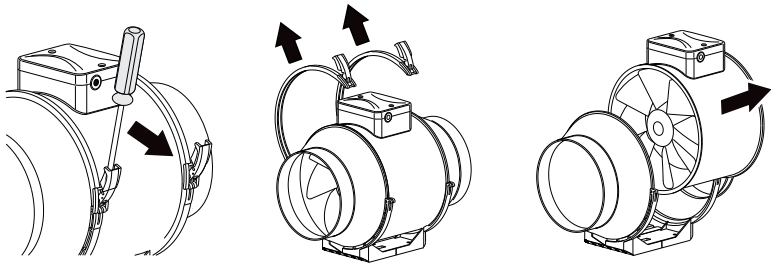

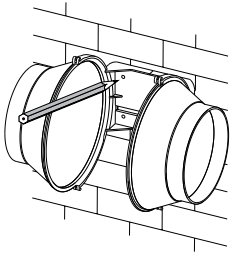

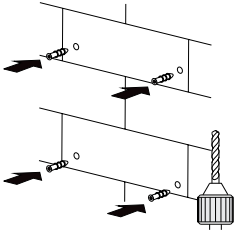

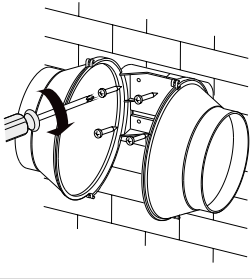

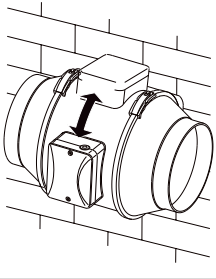

CONNECTION TO POWER MAINS

Terminal designations:

L1: minimum speed terminal;
L2: maximum speed terminal;
LT: timer control terminal;
QF: automatic circuit breaker;
S: external speed switch;
ST: external switch (for example, light switch)
X: input terminal block.

Turbo EC eco

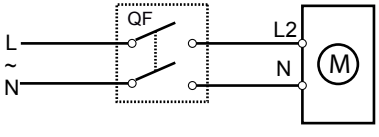

MAX

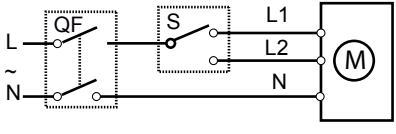

MAX / MIN

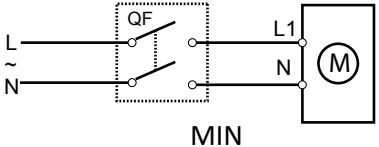

MIN

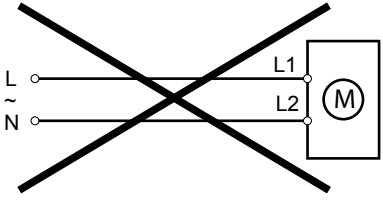

Turbo EC eco T

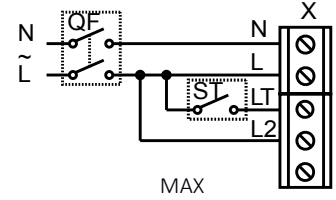

MAX

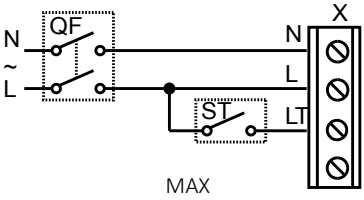

MAX

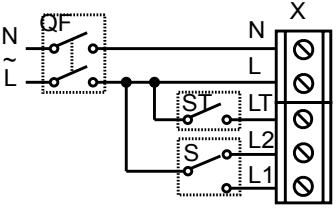

MAX / MIN

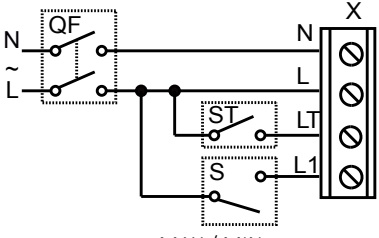

MAX / MIN

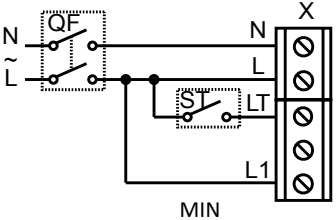

MIN

Terminal box for 5 contacts

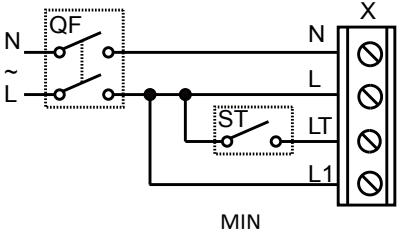

MIN

Terminal box for 4 contacts

The **Turbo EC 100/125 US(W)** fans are equipped with a speed switch.

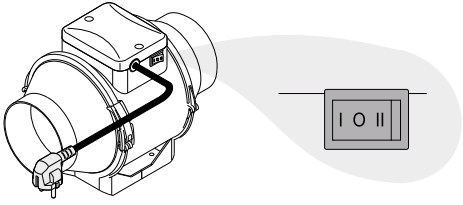

CONTROL LOGIC

The **Turbo EC eco T** fan starts running after the external switch supplies control signal to the LT input terminal (for example, during turning the light on). After removal of the control signal the fan continues to run within the set time (adjustable with the turn-off delay timer from 2 to 30 minutes). To adjust the fan turn-off delay time, rotate the control knob T clockwise to increase and counter-clockwise to decrease the turn-off delay time respectively.

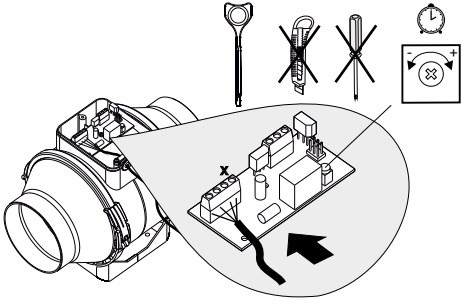

Warning! The timer circuit is under mains voltage. Disconnect the fan from power supply prior to any adjustment operations. The fan delivery set includes a specially designed plastic screwdriver for adjustment of the fan parameters. Use exclusively the delivered plastic screwdriver to adjust the turn-off delay time. Do not use a metal screwdriver, knife, etc. for adjustment operations not to damage the circuit board.

MAINTENANCE

Clean the fan surfaces of dirt and dust each 6 months (Fig. 23–29).
Disconnect the fan from power supply prior to any maintenance operations.
For cleaning the fan use a soft cloth or a brush wetted in a mild detergent solution.
Avoid water dripping on the electric components (Fig. 28)!
Wipe the fan surfaces dry after cleaning.

TROUBLESHOOTING

Problem	Possible reasons	Troubleshooting
When the unit is connected to power mains, the fan does not rotate and does not respond to any controls.	No power supply.	Make sure the power supply line is connected correctly, otherwise troubleshoot the connection error.
	Internal connection fault.	Contact the Seller.
Low air flow.	The ventilation system is clogged.	Clean the ventilation system.
Increased noise, vibration.	The impeller is clogged.	Clean the impeller.
	The fan is not secured well or is not mounted properly.	Troubleshoot the installation error.
	The ventilation system is clogged.	Clean the ventilation system.

STORAGE AND TRANSPORTATION REGULATIONS

- Store the unit in the manufacturer's original packaging box in a dry closed ventilated premise with temperature range from +5 °C to +40 °C and relative humidity up to 70 %.
- Storage environment must not contain aggressive vapors and chemical mixtures provoking corrosion, insulation, and sealing deformation.
- Use suitable hoist machinery for handling and storage operations to prevent possible damage to the unit.
- Follow the handling requirements applicable for the particular type of cargo.
- The unit can be carried in the original packaging by any mode of transport provided proper protection against precipitation and mechanical damage. The unit must be transported only in the working position.
- Avoid sharp blows, scratches, or rough handling during loading and unloading.
- Prior to the initial power-up after transportation at low temperatures, allow the unit to warm up at operating temperature for at least 3-4 hours.

MANUFACTURER'S WARRANTY

The product is in compliance with EU norms and standards on low voltage guidelines and electromagnetic compatibility. We hereby declare that the product complies with the provisions of Electromagnetic Compatibility (EMC) Directive 2014/30/EU of the European Parliament and of the Council, Low Voltage Directive (LVD) 2014/35/EU of the European Parliament and of the Council and CE-marking Council Directive 93/68/EEC. This certificate is issued following test carried out on samples of the product referred to above.

The manufacturer hereby warrants normal operation of the unit for 24 months after the retail sale date provided the user's observance of the transportation, storage, installation, and operation regulations. Should any malfunctions occur in the course of the unit operation through the Manufacturer's fault during the guaranteed period of operation, the user is entitled to get all the faults eliminated by the manufacturer by means of warranty repair at the factory free of charge. The warranty repair includes work specific to elimination of faults in the unit operation to ensure its intended use by the user within the guaranteed period of operation. The faults are eliminated by means of replacement or repair of the unit components or a specific part of such unit component.

The warranty repair does not include:

- routine technical maintenance
- unit installation/dismantling
- unit setup

To benefit from warranty repair, the user must provide the unit, the user's manual with the purchase date stamp, and the payment paperwork certifying the purchase. The unit model must comply with the one stated in the user's manual. Contact the Seller for warranty service.

The manufacturer's warranty does not apply to the following cases:

- User's failure to submit the unit with the entire delivery package as stated in the user's manual including submission with missing component parts previously dismounted by the user.
- Mismatch of the unit model and the brand name with the information stated on the unit packaging and in the user's manual.
- User's failure to ensure timely technical maintenance of the unit.
- Damage to the unit casing and internal components caused by the user.
- Redesign or engineering changes to the unit.

- Replacement and use of any assemblies, parts and components not approved by the manufacturer.
- Unit misuse.
- Violation of the unit installation regulations by the user.
- Violation of the unit control regulations by the user.
- Unit connection to power mains with a voltage different from the one stated in the user's manual.
- Unit breakdown due to voltage surges in power mains.
- Discretionary repair of the unit by the user.
- Unit repair by any persons without the manufacturer's authorization.
- Expiration of the unit warranty period.
- Violation of the unit transportation regulations by the user.
- Violation of the unit storage regulations by the user.
- Wrongful actions against the unit committed by third parties.
- Unit breakdown due to circumstances of insuperable force (fire, flood, earthquake, war, hostilities of any kind, blockades).
- Missing seals if provided by the user's manual.
- Failure to submit the user's manual with the unit purchase date stamp.
- Missing payment paperwork certifying the unit purchase.



FOLLOWING THE REGULATIONS STIPULATED HEREIN WILL ENSURE A LONG AND TROUBLE-FREE OPERATION OF THE UNIT



USER'S WARRANTY CLAIMS SHALL BE SUBJECT TO REVIEW ONLY UPON PRESENTATION OF THE UNIT, THE PAYMENT DOCUMENT AND THE USER'S MANUAL WITH THE PURCHASE DATE STAMP

Quality Inspector's Stamp _____

Turbo EC_____

Seller _____
(name and stamp of the seller)

_____

Purchase Date _____

Manufacturer: Ventilation Systems LLC,
Ukraine, Kyiv, 1 M. Kotsyubynskoho Street
Address of production facilities:
Ukraine, Kyiv Region, Fastiv District, Boyarka, 36 Sobornosti Street

BLAUBERG

www.blaubergventilatoren.de
Turbo EC eco