

SINGLE ROOM HEAT RECOVERY VENTILATION UNIT

Freshpoint 160-E
Freshpoint 160-E L055
Freshpoint 160-E L07
Freshpoint 160-E L1
Freshpoint 160-E-Pro
Freshpoint 160-E-Pro L055
Freshpoint 160-E-Pro L07
Freshpoint 160-E-Pro L1

Freshpoint 200-E
Freshpoint 200-E L055
Freshpoint 200-E L07
Freshpoint 200-E L1
Freshpoint 200-E-Pro
Freshpoint 200-E-Pro L055
Freshpoint 200-E-Pro L07
Freshpoint 200-E-Pro L1

EN ***USER'S MANUAL***

BLAUBERG

CONTENTS

Safety requirements ... 2
Purpose ... 4
Delivery set ... 4
Designation key ... 4
Technical data ... 5
Design and operating principle ... 6
Mounting and set-up ... 7
Connection to power mains ... 12
Unit control ... 13
Technical maintenance ... 17
Storage and transportation regulations ... 18
Manufacturer's warranty ... 19
Certificate of acceptance ... 23
Seller information ... 23
Installation certificate ... 23
Warranty card ... 23

This user's manual is a main operating document intended for technical, maintenance, and operating staff.
The manual contains information about purpose, technical details, operating principle, design, and installation of the Freshpoint 160/200-E (Pro) (L055/07/1) unit and all its modifications.
Technical and maintenance staff must have theoretical and practical training in the field of ventilation systems and should be able to work in accordance with workplace safety rules as well as construction norms and standards applicable in the territory of the country.

SAFETY REQUIREMENTS

This unit is not intended for use by persons (including children) with reduced physical, sensory or mental capabilities, or lack of experience and knowledge, unless they have been given supervision or instruction concerning use of the unit by a person responsible for their safety.
Children should be supervised to ensure that they do not play with the unit.
This appliance can be used by children aged from 8 years and above and persons with reduced physical, sensory or mental capabilities or lack of experience and knowledge if they have been given supervision or instruction concerning use of the appliance in a safe way and understand the hazards involved.
Cleaning and user maintenance shall not be done by children without supervision.
Children shall not play with the appliance.

Connection to the mains must be made through a disconnecting device, which is integrated into the fixed wiring system in accordance with the wiring rules for design of electrical units, and has a contact separation in all poles that allows for full disconnection under overvoltage category III conditions.

If the supply cord is damaged, it must be replaced by the manufacturer, its service agent, or similarly qualified persons in order to avoid a safety hazard.

Precautions must be taken to avoid the back-flow of gases into the room from the open flue of gas or other fuel-burning appliances.

Ensure that the unit is switched off from the supply mains before removing the guard.

Do not attach the product to the support using glue or adhesives. Use only the fastening method specified in the "User's manual".

All operations described in this manual must be performed by qualified personnel only, properly trained and qualified to install, make electrical connections and maintain ventilation units.
Do not attempt to install the product, connect it to the mains, or perform maintenance yourself. This is unsafe and impossible without special knowledge.
Disconnect the power supply prior to any operations with the unit.
All user's manual requirements as well as the provisions of all the applicable local and national construction, electrical, and technical norms and standards must be observed when installing and operating the unit.
Disconnect the unit from the power supply prior to any connection, servicing, maintenance, and repair operations.
Connection of the unit to power mains is allowed by a qualified electrician with a work permit for the electric units up to 1000 V after careful reading of the present user's manual.
Check the unit for any visible damage of the impeller, the casing, and the grille before starting installation. The casing internals must be free of any foreign objects that can damage the impeller blades.
While mounting the unit, avoid compression of the casing! Deformation of the casing may result in motor jam and excessive noise.
Misuse of the unit and any unauthorised modifications are not allowed.
Transported air must not contain any dust or other solid impurities, sticky substances, or fibrous materials.
Do not use the unit in a hazardous or explosive environment containing spirits, gasoline, insecticides, etc.
Do not close or block the intake or extract vents in order to ensure the efficient air flow.
Do not sit on the unit and do not put objects on it.
The information in this user's manual was correct at the time of the document's preparation.
The Company reserves the right to modify the technical characteristics, design, or configuration of its products at any time in order to incorporate the latest technological developments.
Never touch the unit with wet or damp hands.
Never touch the unit when barefoot.
BEFORE INSTALLING ADDITIONAL EXTERNAL DEVICES, READ THE RELEVANT USER MANUALS.



THE PRODUCT MUST BE DISPOSED SEPARATELY AT THE END OF ITS SERVICE LIFE

DO NOT DISPOSE THE UNIT AS UNSORTED DOMESTIC WASTE

PURPOSE

The ventilator is designed to ensure continuous mechanical air exchange in flats, cottages, hotels, cafés and other domestic and public premises. The ventilator is equipped with a heat exchanger that enables supply of fresh filtered air heated by means of reusing the heat contained in extract air.
The ventilator is designed for installation on external walls.
The ventilator is rated for continuous operation.

DELIVERY SET

Name	Quantity
The unit	1 pc.
Remote control	1 pc.
Mounting kit	1 pc.
Mounting wedges	1 set
Sealer	1 pc.
Mounting template	1 pc.
User's manual	1 pc.
Packing box	1 pc.

DESIGNATION KEY

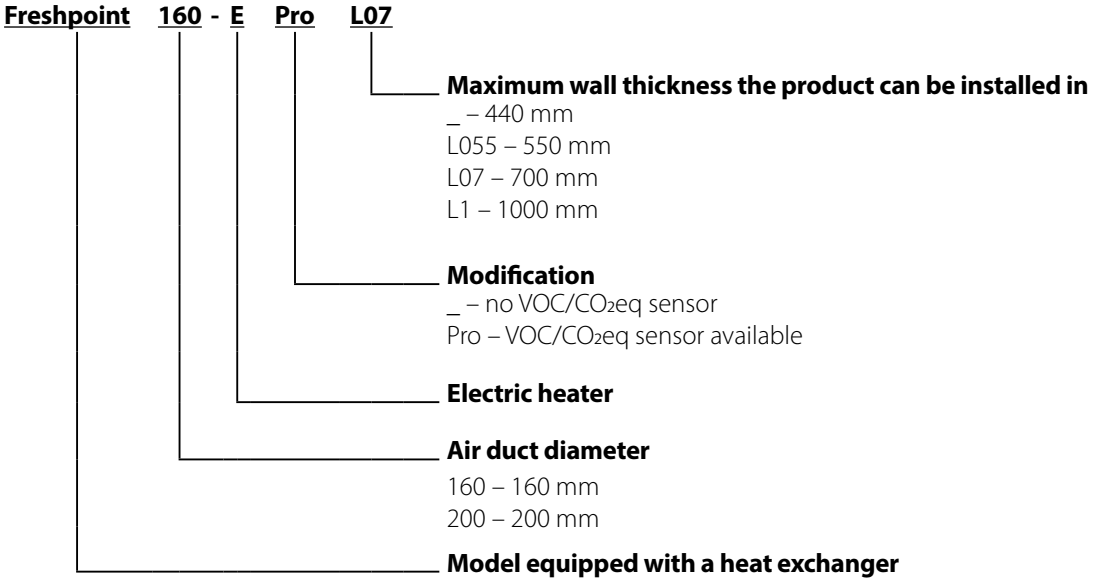

TECHNICAL DATA

The temperature in the room where the indoor unit of the ventilator is installed must be in the range from +5 ˚C to +40 ˚C and relative humidity up to 70% (without humidity condensation). Provide fresh air through the windows.
The temperature of the transported air should be in the range from -30 ˚C to +40 ˚C.
The power consumption of the product depends on the use of the built-in heaters. The power consumption ranges without the use of the heaters (mode 1) and with the use of the heaters (mode 2) are indicated on the label.
The unit is rated as a class II electric appliance.
Ingress protection rating against access to hazardous parts and water ingress is IPX4.
The unit design is constantly being improved, thus some models may slightly differ from those described in this manual.

Parameter	Freshpoint 160-E Freshpoint160-E-Pro			Freshpoint 200-E Freshpoint 200-E-Pro		
Speed	1	2	3	1	2	3
Power mains parameters	220-240 V 50/60Hz			220-240 V 50/60Hz		
Power consumption without heater [W]	5.0	11.0	22.0	5.0	11.0	22.0
Power consumption of built-in heater [W]	100			100		
Unit current without heater [A]	0.03	0.07	0.10	0.03	0.07	0.10
Total unit current [A]	0.56	0.59	0.65	0.56	0.59	0.63
Air flow [m³/h]	15	35	57 (70*)	15	50	70 (90*)
Sound pressure level at 1 m distance [dBA]	23	44	53	25	48	55
Sound pressure level at 3 m distance [dBA]	12	34	42	15	37	45
Classification of air flow sensitivity to pressure difference variations in accordance with EN 13141-8	S3			S3		
Indoor/outdoor airtightness classification of the complete unit in accordance with EN 13141-8	D1			D1		
Heat recovery efficiency [%]	≤88			≤85		
Transported air temperature [℃]	-30…+ 50			-30…+ 50		
Filter	G3			G3		
SEC-class	A			A		

***Boost mode**

The figure below shows he overall dimensions of the product.

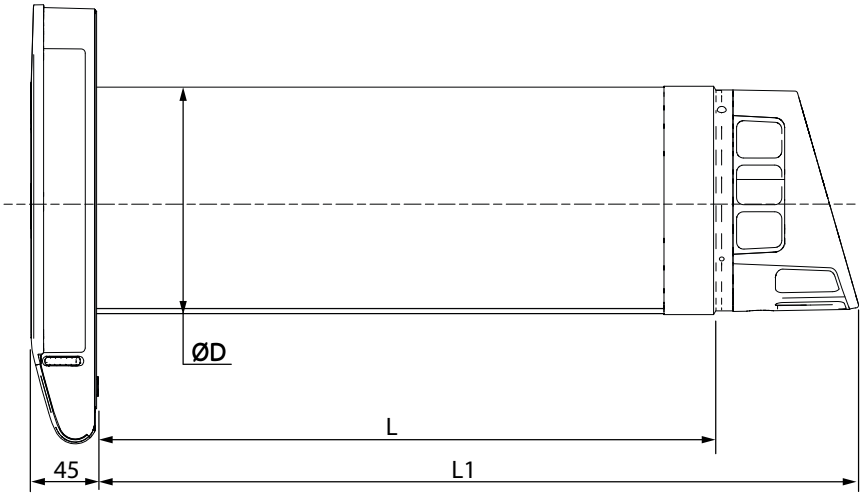

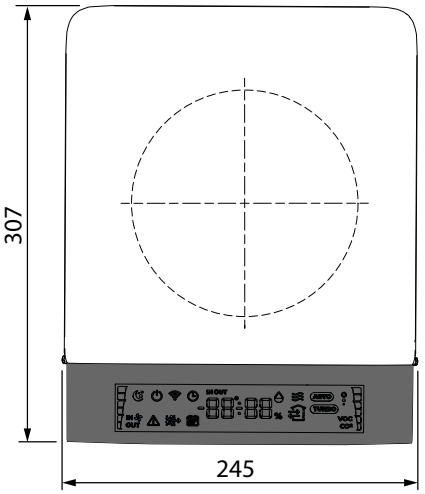

Model	øD	L	L1
Freshpoint 160-E-Pro (Pro)	162	440	540
Freshpoint 160-E-Pro (Pro) L055	162	550	650
Freshpoint 160-E-Pro (Pro) L07	162	700	800
Freshpoint 160-E-Pro (Pro) L1	162	1000	1100

Model	øD	L	L1
Freshpoint 200-E (Pro)	206	440	540
Freshpoint 200-E (Pro) L055	206	550	650
Freshpoint 200-E (Pro) L07	206	700	800
Freshpoint 200-E (Pro) L1	206	1000	1100

DESIGN AND OPERATING PRINCIPLE

The product consists of an operating module with the indoor unit and external housing.

The operating module contains fans, the heat exchanger, heaters, supply and extract air ducts. Heat exchanger is used to transfer heat energy between the air flows. This is how extract air heat energy is utilized to warm up supply air.

Extract and supply air duct inlets are equipped with rough filters and manual rotating dampers.

The filters are intended to prevent ingress of dust and foreign objects inside the heat exchanger and fans. The rotating dampers can be used to manually shut air ducts when the product is unused.

The external housing has a ventilation hood on the outdoor side intended for directed air removal and preventing water and foreign objects from ingress into the product.

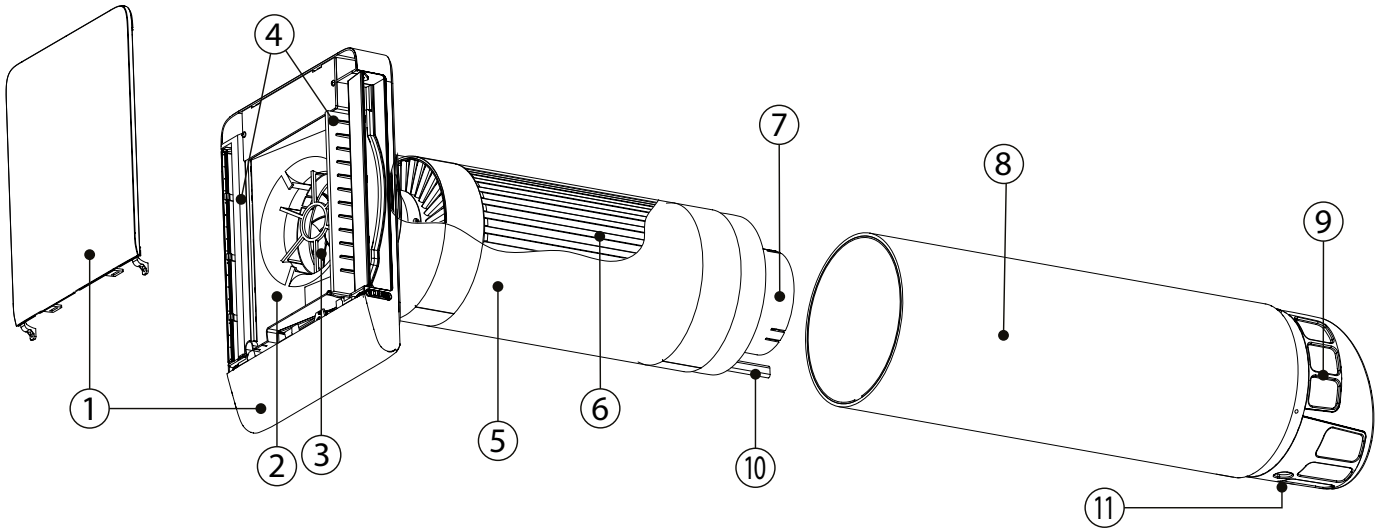

1 – decorative panels; 2 – indoor unit; 3 – supply fan; 4 – filters; 5 – film heater; 6 – heat exchanger; 7 – exhaust fan; 8 – external housing; 9 – ventilation hood; 10 – condensate heater; 11 – condensate drain outlet.

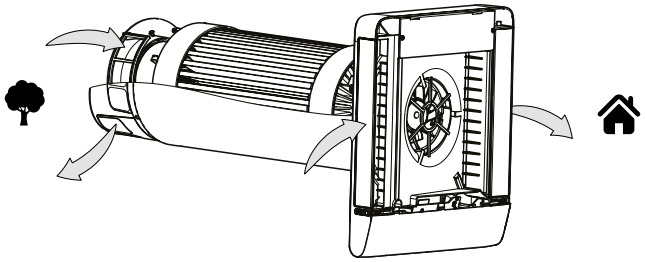

Models labelled as L055; L07; L1 feature an air duct extension node.

When using these models, it is possible to manually shorten the product before mounting so that the value L mentioned on the figure in the «Technical data» section equals the wall thickness.

The figure below illustrates the location of an operation module and air duct extension node parts inside the housing.

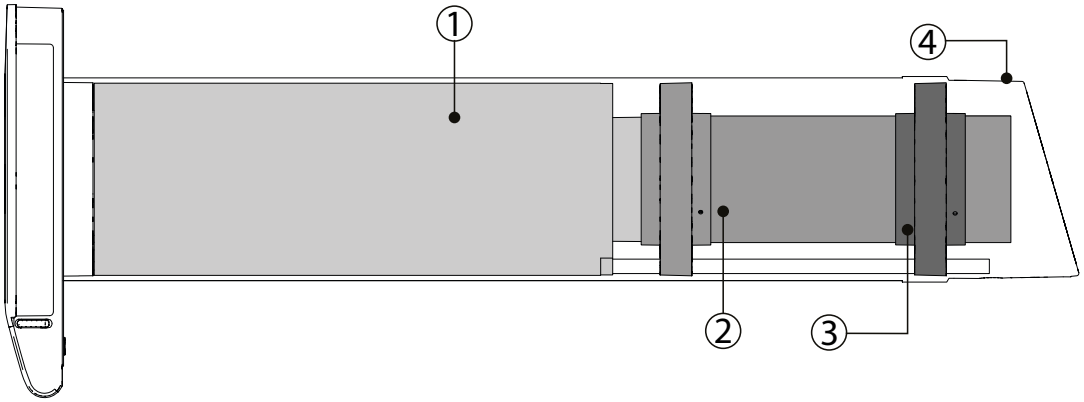

1– operating module; 2 – assembled internal air duct extender and the first centering coupling;
3 – second centering coupling; 4 – external housing.

MOUNTING AND SET-UP

READ THE USER'S MANUAL BEFORE INSTALLING THE UNIT

WHEN THE PRODUCT IS INSTALLED IN BUILDINGS, WHERE WIND OVERLOAD IS POSSIBLE, IN PREMISES WITH PASSIVE VENTILATION, FIREPLACES OR PRE-INSTALLED VENTILATION UNITS (EXTRACT FANS, KITCHEN HOOD ETC.) SUPPLY AND EXTRACT AIR IMBALANCE IS POSSIBLE

IT MAY CAUSE DRAFTS AND DESTABILIZE TEMPERATURE IN WINTER SEASON. CONTACT QUALIFIED SPECIALISTS TO AVOID IMBALANCE

DO NOT BLOCK THE AIR DUCT OF THE INSTALLED VENTILATOR WITH DUST ACCUMULATING MATERIALS, SUCH AS CURTAINS, CLOTH SHUTTERS, ETC

AS IT PREVENTS AIR CIRCULATION IN THE ROOM

Determining the optimal location for the product

The product is mounted in an external wall so that its indoor unit is located in the residential area, and a part of the external casing with the supply and exhaust ducts and condensate drain is located outside.
For proper operation of the product, it is necessary that the supply air flow is evenly mixed with the indoor air and does not enter the exhaust air duct.

To ensure free convective air circulation in the room, the space in front of the indoor unit must be free of obstacles, such as furniture, curtains and other interior elements.
If the space around the indoor unit is separated from the rest of the room by an obstacle, the air supplied through the supply air duct will be immediately exhausted through the exhaust air duct. In the rest of the room, the ventilation effect will be drastically reduced. Also, the effect of heat recovery will be nearly non-existent.

Furthermore, in order to create a zone of free natural air mixing, it is important to maintain the minimum distances from the product to the ceiling, room corner, floor and window as shown in the figure.

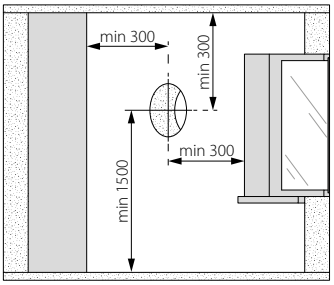

Locate the product as far as possible from heat sources (heating devices, electric stoves, etc.) and devices that use air for combustion (fireplaces, gas stoves, etc.).

Combined operation of the product and air conditioner in the same room can be very effective if the devices are positioned correctly. The cool air from the air conditioner flows downwards, so place the product at the same height as the air conditioner.

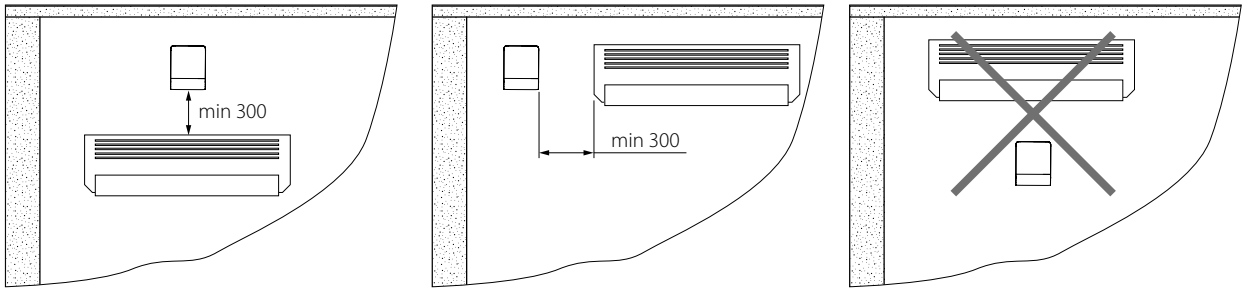

When choosing the location of the product in resting and sleeping areas, keep in mind that the product will act as an additional source of noise. Keep in mind that during the cold season, the supply air temperature from the product will be lower than the ambient temperature. Consequently, the supply air flow will go down and may cause discomfort to people and be felt as a draft. Place the product away from beds, armchairs, etc.

Do not install the product in wet areas (bathrooms, toilets, greenhouses, etc.).
Install only exhaust ventilation in these areas.

The pressure difference between the room and the outside space when the exhaust ventilation is operating can disrupt the product. This can lead to unwanted drafts and, in the cold season, to a drop in the room temperature and product freezing.

Possible deviations in the operation of the device caused by installation errors

Visual signs	Possible reason
Condensation on the wall in the room; Incorrect operation of the device control system; Ice formation in the unit casing during the cold season; Short circuit in the power mains.	The product casing is installed horizontally or inclined towards the room.
	The product's external housing is mounted so that the condensate drain hole is not facing downwards.
Low or no air flow; Overheating and motor failure; No heat recovery effect during ventilation.	The product is mounted in a wall that is thicker than the allowable thickness for this model. 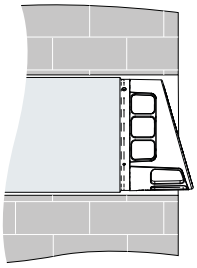
Air blowing between the unit casing and the wall; Wall freezing.	The seal between the product's outer casing and the wall is not complete
Product control system malfunction; Short circuit in the power mains.	Interference with the product's electrical circuit by unqualified persons.

Matching the length of the product to the thickness of the external wall.

For the product to function properly, the ventilation hood must be positioned as shown in the figure. The distance from the wall to the edge of the ventilation cap should not exceed 40 mm, and the condensate drain hole should be directed strictly downwards.

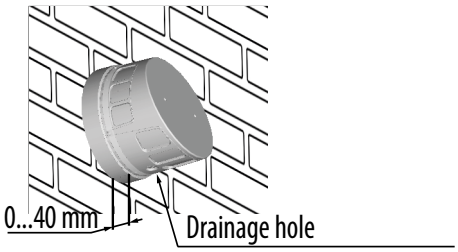

In cases where the installation site is accessible from the outer side of the wall, a compensation pad or a metal seal can be used, which must be purchased separately.

The figure below shows a set of compensation pads and an example of their use for mounting the Freshpoint 160/200-E (Pro) product in a wall with a thickness of less than 400 mm.

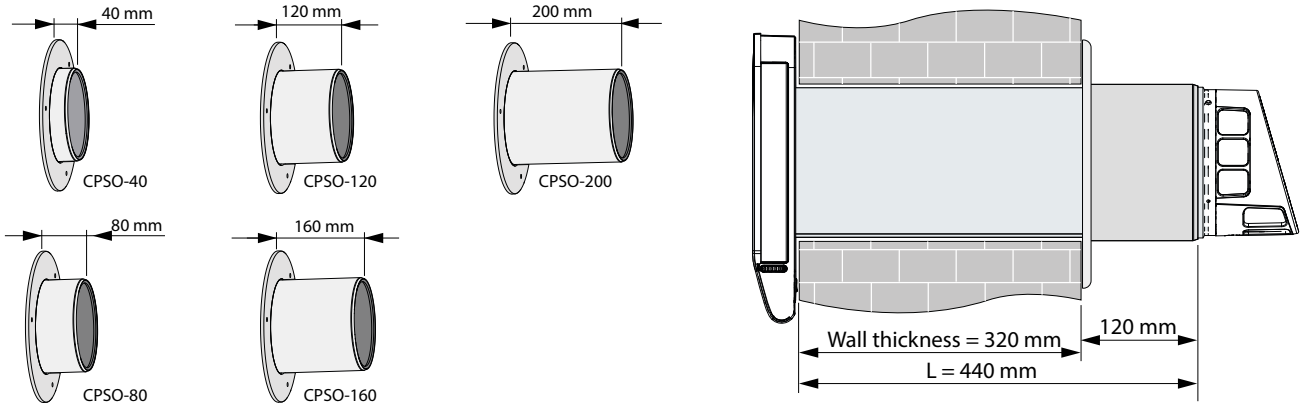

For the most optimal matching of the product length and wall thickness, when access to the outer side of the wall is not possible, take advantage of the trimming option for the outer housing and extension unit of the Freshpoint 160/200-E (Pro) (L055/07/1) models. For wall mounting, use the mounting holes on the compensator pad.

The table below shows the allowable wall thicknesses for these methods of matching.

Model	Possible wall thicknesses for trimming	Possible wall thicknesses when using compensating pads*				
		CPSO-40	CPSO-80	CPSO-120	CPSO-160	CPSO-200
Freshpoint 160/200-E (Pro)**	400…440	360…400	320…360	280…320	240…280	200…240
Freshpoint 160/200-E (Pro) L055	400…550	470…510	430…470	390…430	350…390	310…350
Freshpoint 160/200-E (Pro) L07	400…700	620…660	580…620	540…580	500…540	460…500
Freshpoint 160/200-E (Pro) L1	400…1000	920…960	880…920	840…880	800…840	760…800

*To be purchased separately and installed from the outdoor side.

** No trimming available. Trimming is not possible.

The figure below shows the metal seal (purchased separately) and an example of its use. For wall mounting, use the mounting holes in the seal.

MPS

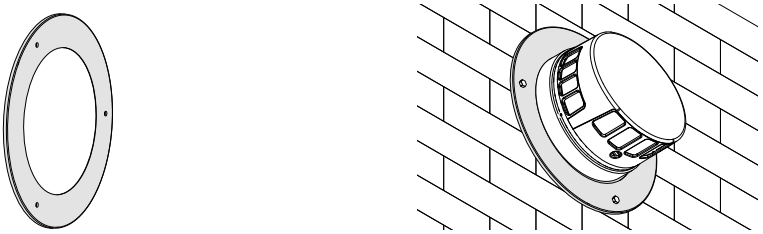

Sequence of operations to trim Freshpoint 160/200-E (Pro) (L055/07/1) products

If the wall thickness is equal to the L dimension of your product, you can proceed to step 1 of the product installation instructions.
If the dimension L of your product is greater than the wall thickness, you can trim it before installation.
To do so, follow these steps:
Determine the exact thickness of the wall where the product is to be installed.
The length by which the product needs to be trimmed is equal to the difference between the product's L dimension and the wall thickness.

Trim the external housing.

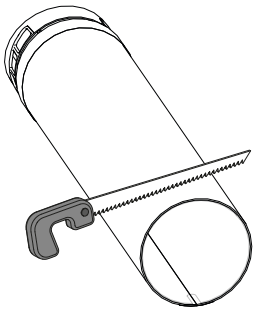

Trim the spigot of the extension node to the same length as the external housing.

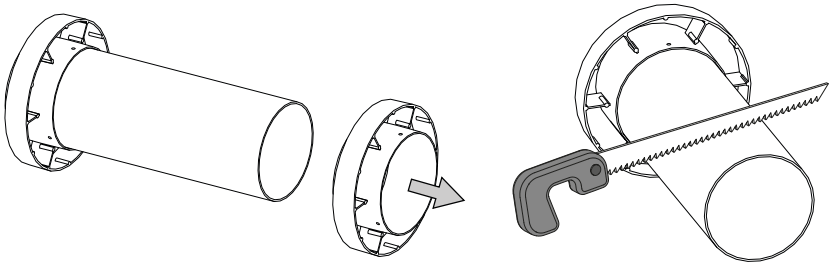

Put the second centering coupling on the shortened spigot and secure it with adhesive aluminium tape at least 10 mm away from the cut on the spigot.

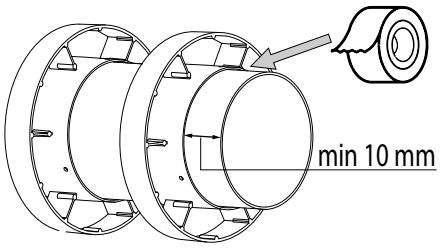

Proceed as follows to trim the condensate heater:

The condensate heater is installed inside the operating module and cannot be removed.
Place the operating module vertically on a table.
Use a pair of wire cutters to cut off a section of the condensate heater of the same length as the spigots were trimmed.

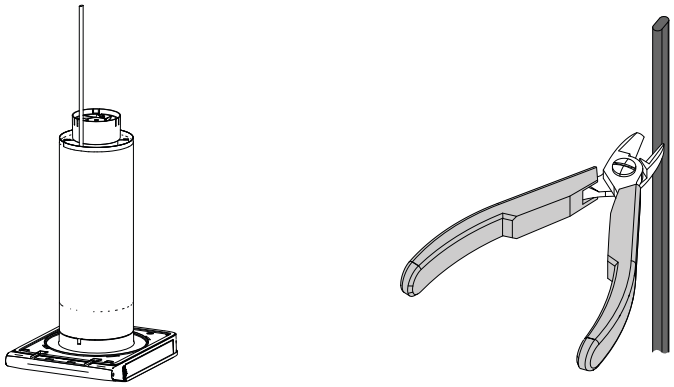

Use a knife to remove the outer cover of the cable over a 10-15 mm section.
Remove the shielding braid from this section with wire cutters.
Use a knife to make a cut in the heater resistive material as shown in the figure.

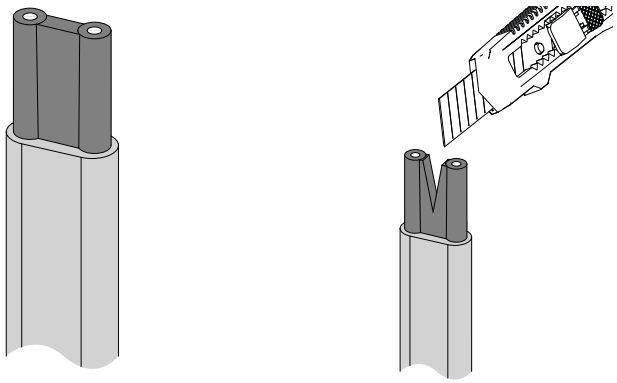

To insulate the heater and make the cut airtight, use the heat-shrink tubing with an adhesive layer (included in the delivery set).
Put on a 30-mm long section of it. Fit it using an industrial dryer. Press the overlapping part with pliers.

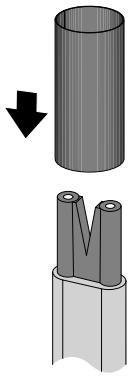

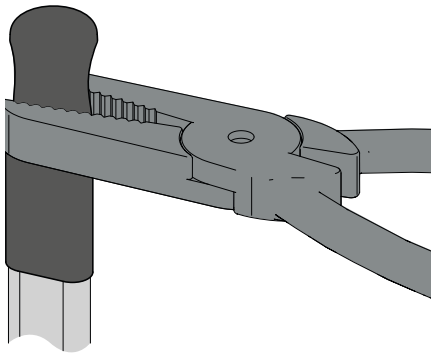

Fit the shortened extension node into the operating module and secure it with aluminium adhesive tape. The condensate heater must pass through the centering couplings as shown in the figure.

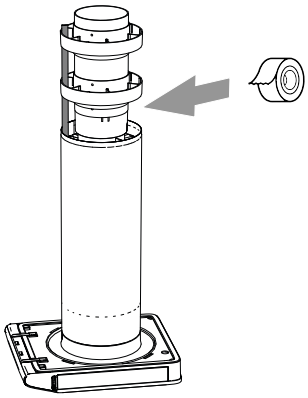

Unit mounting

1. Prepare a round core hole in the outer wall 172 mm in diameter for Freshpoint 160-E models and 212 mm in diameter for Freshpoint 200-E models.

2. Detach the external housing from the operation module.

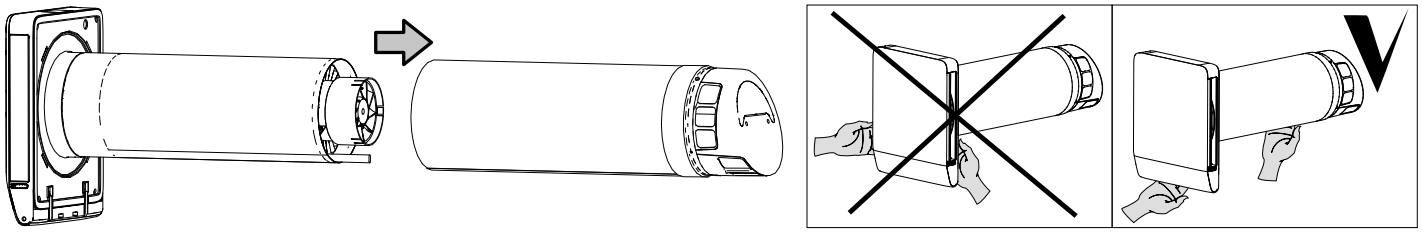

Warning! Do not connect it to the power mains when detached!

3. Glue the sealant to the external housing (included in the delivery kit) on the air duct at a distance A (wall thickness) from the indoor end of the air duct.
For anti-UV protection, it is recommended to wrap aluminum tape around the sealant.

Insert the air duct into the hole so that its cross-section fits the internal wall surface.

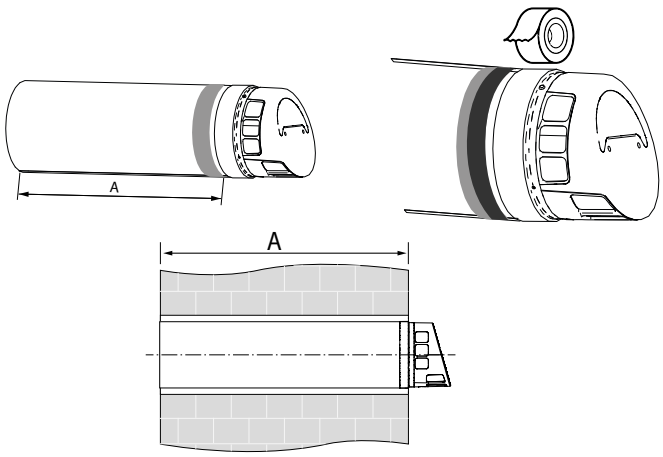

Do not block external grilles of air ducts and the drainage hole. Make sure the air duct is inclined using the mounting wedges (item 3) from the delivery set. Fill in the gap between the wall and the air duct with non-expanding mounting foam.

Do not turn the outer ventilation hood upside down. The drainage hole (item 1) must point straight down. When aligning the housing from the inside, follow the vertical and horizontal grille bars (item 2).

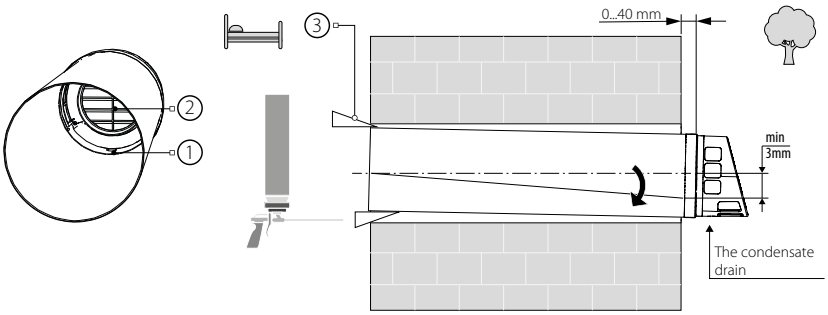

Warning! Do not deform the air duct with mounting wedges and foam!

4. To remove the bottom panel (item. 1), pull its lowermost edge to yourself.
Remove the top decorative panel (item 2) from the operation module by unscrewing the screws.

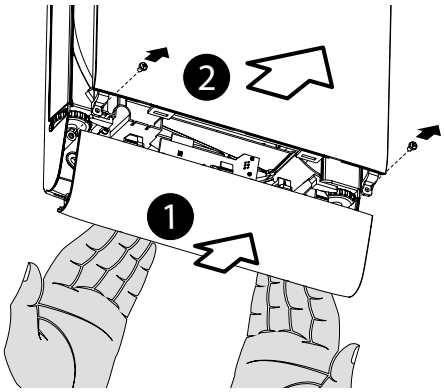

5. Put the mounting template on the wall. Align it using the level. Afterward, mark the openings to insert dowels from the mounting kit and drill the holes of required depth.
When connecting it to fixed wiring, mark the cable outlet site (item 1). Pull the power cord through to the marked site.
6. Install the operation module into the duct. Fix the back part of the indoor unit using screws.

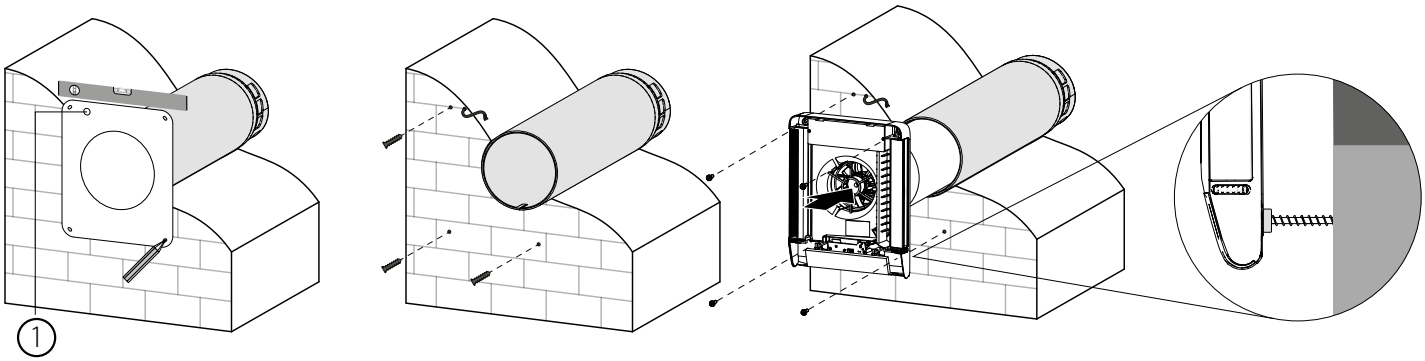

7. Install decorative panels after connecting.

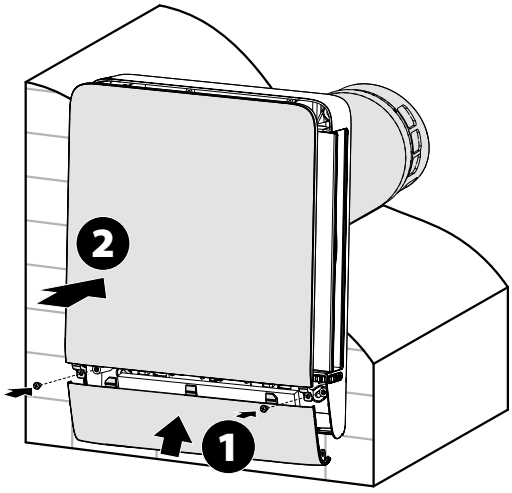

8. Open air inlets before turning on the system. If an air inlet is not open, and the unit is operating, it may cause damage and malfunction of the unit.

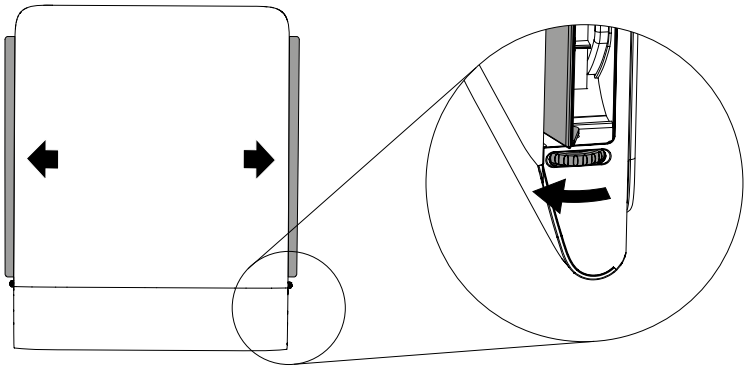

CONNECTION TO POWER MAINS

The unit is rated for connection to power mains with the parameters specified in the "Technical data" section. The unit must be connected using the power cord with a plug pre-installed at the factory, or fixed wiring.
To connect to fixed wiring, do the following:
remove the cable with the plug;

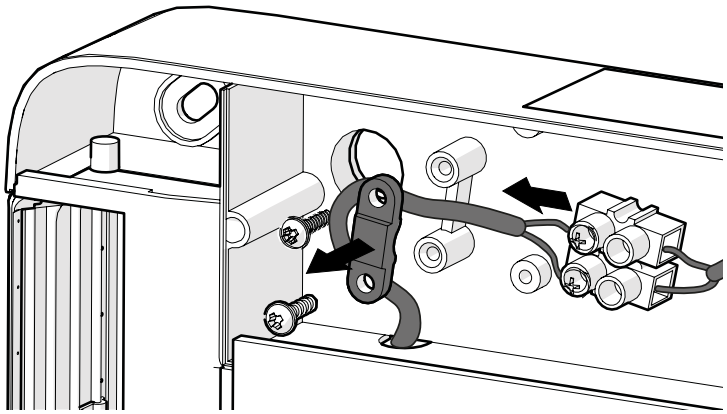

connect the cable to fixed wiring.

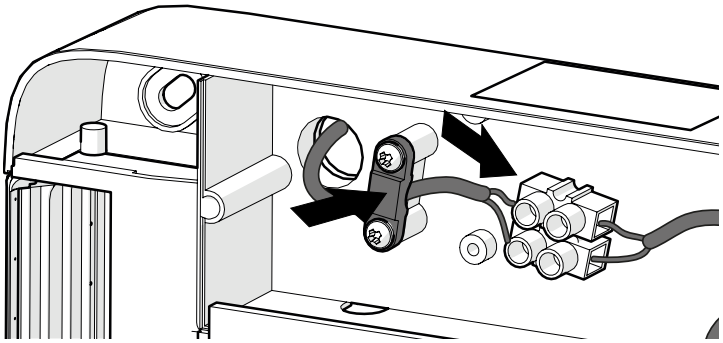

WARNING! Do not connect the product via any type of speed controller - thyristor, autotransformer, frequency controller, etc.

THE PRODUCT CONSISTS OF ELEMENTS THAT ARE AN INTEGRAL PART OF THE PRODUCT

THE CORRECT OPERATION OF THE PRODUCT IS ONLY POSSIBLE IN THE CONFIGURATION AND DESIGN SUPPLIED BY THE MANUFACTURER

IN THE EVENT OF INTERFERENCE WITH THE PRODUCT DESIGN OR CHANGES TO THE WIRING DIAGRAM, THE MANUFACTURER IS NOT RESPONSIBLE FOR THE PRODUCT'S SERVICEABILITY AND DOES NOT ASSUME ANY WARRANTY OBLIGATIONS

UNIT CONTROL

The product can be controlled using the remote control and a mobile app via Wi-Fi.

Before turning on the unit, open the rotating dampers on the indoor part of the unit.
After turning off the unit, the dampers may be left open to use the unit in passive ventilation mode. The dampers may also be closed do avoid drafts.

System display description

The display appearance is illustrated in the diagram below.
Display indication may differ depending on the system configuration.
The scale to the left-hand side displays the fan speeds. The scale to the right-hand side displays air quality.

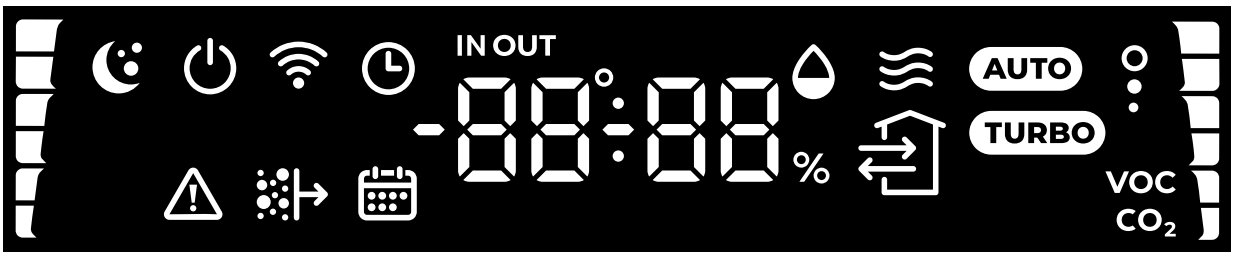

The screen displays such information as time, temperature, humidity, or all data one by one. You can also choose a temperature sensor to be displayed (outdoor, supply, indoor) and VOC/CO_2eq sensor.
The bar to the right-hand side displays the fan speeds. The bar to the left displays air quality.

- – Error indicator
- – Filter replacement indicator
- – Night mode indicator
- – Heating indicator (film heater)
- AUTO – Auto function indicator
- TURBO – Turbo function indicator
- – Frost protection mode indicator
- – Supply only / Recovery only / Extraction only indicator
- – Timer
- – Calendar
- IN OUT – Indoor / outdoor temperature
- – Wi-Fi indicator
- – On / Off indicator
- VOC CO_2 – Air quality / CO_2eq concentration indicator

Description of the remote control

The function of the remote control buttons is shown in the figure below.
When the product is turned on using the **ON/OFF** button on the remote control, it will operate in the mode in which it was turned off.
The functions of the buttons may vary and depend on the system configuration, for details please refer to this manual for each function

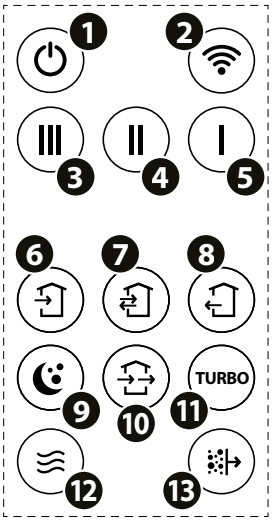

- **1** – Turning ON/OFF
- **2** – Wi-Fi connection mode between the product and smartphone
- **3-5** – Speed switching
- **6-8** – Supply only / Recovery only / Extraction only
- **9** – Night timer. Speed 1 (8 hours)
- **10** – Not used
- **11** – Turbo timer. Speed (hours)
- **12** – Heater activation (film heater)
- **13** – Resetting the filter replacement timer.
  To reset the filter timer, press and hold the button for 3 seconds until it beeps.
  Reset is also available in the smartphone app.

To reset to factory settings, hold the button 1 for 10 seconds until it beeps.

Connecting your smartphone device to the product

You can download the app by following the link to the App Store or Play Market, or by using QR codes.

Blauberg Home – App Store

Blauberg Home – Play Market

Wi-Fi technical data

Standard	IEFE 802.11b/g/n
Frequency band [GHz]	2.4
Transmission power [mW] (dBm)	100(+20)
Network	DHCP
WLAN security	WPA, WPA2

To start working with the product, first connect to it as a Wi-Fi access point with the name FAN: + 16 characters of the ID number) indicated on the control board and on the product casing.

Wi-Fi access point password: 11111111.

The app allows to configure the product to connect via your home Wi-Fi network and via a cloud server. To do so, create an account in the app and add the device in the list of connections by following prompts in the app.

To restore the Wi-Fi password or connect to the unit, in order to change the settings, **Setup Mode** is provided. To activate the mode, press and hold the 2 (Wi-Fi) button on the remote control for 3 seconds until it beeps and the Wi-Fi indicator on the front panel of the product starts flashing slowly.

When using a smartphone to control the unit, some functions may operate differently after updates. Some points of this instruction may become irrelevant in case of software updates.

Wi-Fi indicator on the front panel:

Flashes rapidly	Connection issues
Flashes slowly	**Setup Mode** is active
Stays continuously lit	Wi-Fi is connected to the home network
Does not light up	Wi-Fi is running in the access point mode

The main modes, functions, settings available in the smartphone application are as follows:

On/Off. Turning the product on or off.

Speed switch: 1, 2, 3
Selecting the corresponding fans speed. It is controlled using the buttons on the remote control or in the smartphone app.

Ventilation direction: supply, exhaust, recovery.
Selecting the air flow direction. It is controlled using the buttons on the remote control or in the smartphone app.

Weekly schedule
It is activated using the mobile app. It has the lowest priority. It is used to set the product to operate by schedule. For the mode to work properly, make sure that the date and time are set correctly.

Night mode
The minimum and quietest operating mode of the system, which is designed for nighttime operation.
It is activated with the button on the remote control or in the smartphone app.

Turbo mode
It is activated by pressing the button on the remote control or in the smartphone app. This mode sets the highest fan speed. The corresponding light indicator on the dashboard is lit up.

Auto mode
This mode suggests a gradual increase in the fan speed relative to the currently selected speed based on the worst indicator (RH, VOC/CO_2eq)*. The corresponding indicator on the dashboard is lit up.

Air quality change diagram (30 days): room temperature, RH, VOC/CO2eq*.
The sensors installed in the product are not a metrologically accurate means of measurement. The sensors are designed to monitor changes in air quality and temperature conditions to control the system accordingly. The IAQ index is determined based on the VOC sensor.
*The availability of VOC/CO_2eq sensors depends on the unit model.

The index of air quality (IAQ) classification for volatile organic compounds in the air is shown in the table below.

IAQ	Air quality	Impact (long-term)	Recommended action
0–50	Excellent	Clean air; the best for well-being	No action required
51–100	Good	Does not cause irritation of the mucous membranes and respiratory tract and does not affect well-being	No action required
101–150	Slight contamination	Possible deterioration of well-being	Ventilation is recommended
151–200	Medium contamination	More significant irritation of the mucous membranes and respiratory tract is possible	Increase fresh air ventilation
201–250	Heavy contamination	Exposure can cause negative effects such as headaches	Optimize ventilation
251–350	Very heavy contamination	More serious health problems are possible	If this level is reached even without people in the room, the source of contamination should be identified; increase ventilation and shorten visits
> 351	Extreme contamination	Possible headaches, additional neurotoxic effects	It is necessary to identify the source of contamination, avoid staying in the room and ventilate as much as possible

Heat exchanger frost protection
The unit has an algorithm to protect the heat exchanger from frost in winter season.
According to the algorithm, if heat exchanger frost danger is detected, gradual supply fan speed decrease (until it stops), gradual extract fan speed increase, or automatic heater power-on may be initiated.

Indication of active frost protection mode is displayed on the screen and in the smartphone app.

If the frost danger is still persistent after these action are taken, "Frost threat" alarm may appear.

If the frost threat alarm stays active for 30 minutes, the "Frost" failure occurs and the unit stops.

Reheating
The unit has a built-in electric heater, which can be used to increase supply air temperature.
The heater autonomously turns on when the frost protection algorithm is active and if the outdoor air temperature is below +4 °C, and the indoor temperature is under +24 °C. If the outdoor temperature is higher than +4 °C, the heater may be turned on or off with a remote control button or via the smartphone app.
When the heater is on, the corresponding indicator on the screen will turn red. This information also is displayed in the smartphone app. The temperature sensor measuring error is ±2 ˚C.

Filter replacement timer
A filter replacement timer can be set up. This function roughly indicates how clogged the filter is so that it can be cleaned or replaced. After the set time has elapsed (90 days by default), the filter replacement indicator appears.

Light sensor for automatic display brightness change
To ensure the product's ease of use in the dark, multiple indication brightness levels are set up. Display indication brightness is adjusted automatically, it can also be changed or turned off via the smartphone application.

Possible faults, their warnings and troubleshooting are specified below.

FAULTS	
1	**Fans fault.** The unit stops. The indicator and the app display a fault notification. Eliminate the cause of the fan's stop.
2	**Frost.** The unit stops. The fault occurs if the frost threat notification stays active for 30 min.

WARNINGS	
1	**Air filter maintenance required.** The unit continues operating. Maintenance is required. The notification can be dismissed via the remote control or smartphone app.
2	**Sensor fault.** The unit continues operating, but any faulty sensor-related automatic control functions will be disabled.
3	**Frost danger** The unit continues operating. The notification is caused during recovery operation mode if the air temperature downstream the heat exchanger in the extract air duct drops below +2 °C. Supply and extract air imbalance. It may be caused by any other operating ventilation units (fans, range hoods, etc.), passive ventilation, drafts, fireplace, outdoor wind overload. Turn off the unit and close the manual shutters. Fix the cause of the imbalance if possible.

In case of simultaneous ventilator's operation in mutually exclusive operating modes, the mode priority is the following (selected autonomously):
1. Night or Turbo
2. Standby
3. Auto
4. Weekly schedule
5. Normal mode

TECHNICAL MAINTENANCE

DISCONNECT THE PRODUCT FROM THE POWER SUPPLY BEFORE PERFORMING ANY MAINTENANCE WORK

Maintenance of the ventilator means regular dusting of the ventilator surfaces and cleaning and replacing the filters. To access the filters, remove the decorative panels from the operating module.
Remove the filters.
Clean the filter as necessary, but at least once every 3 months.

- The filter must be washed and dried, then reinserted into the air intake when dry.
- Vacuum cleaning is allowed.
- Filter service life is 3 years.
- To purchase new filters, contact the Seller.

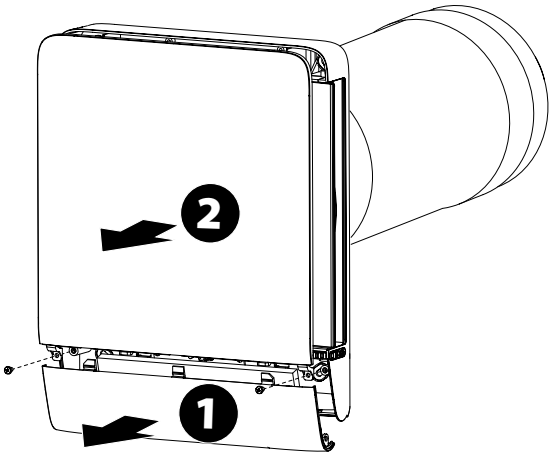

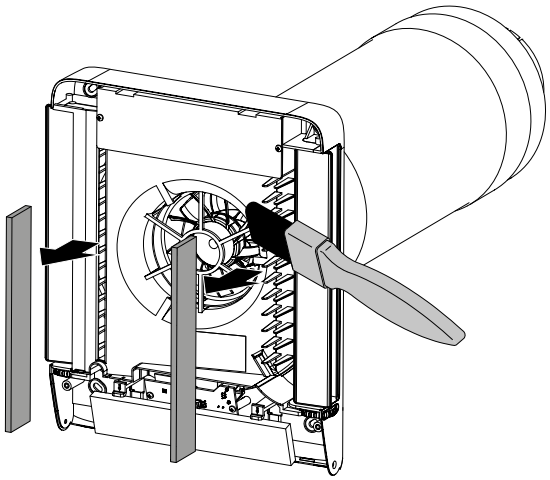

To access the main assemblies for service, follow these steps: remove the front panel from the work module; disconnect the cable; remove the cover; unscrew the four screws holding the indoor unit in place, remove it from the air duct.

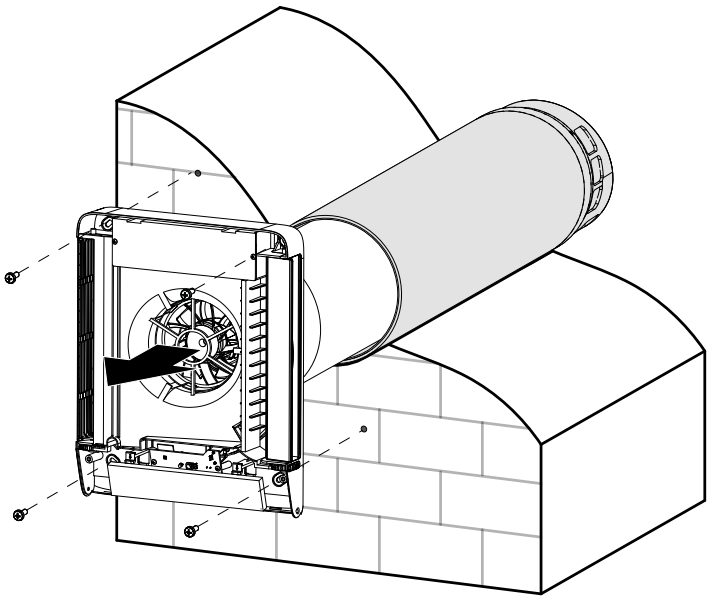

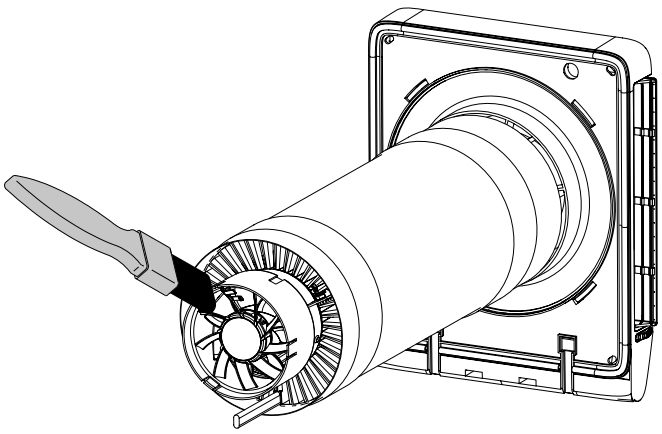

If necessary, the remote control battery may be replaced.
No response of the unit for pressing the remote control buttons indicates the need to replace the battery.
The battery type is CR2025.
Remove the holder with the battery from the bottom part of the remote control.
Replace the battery and install the holder with a new battery back into the remote control.

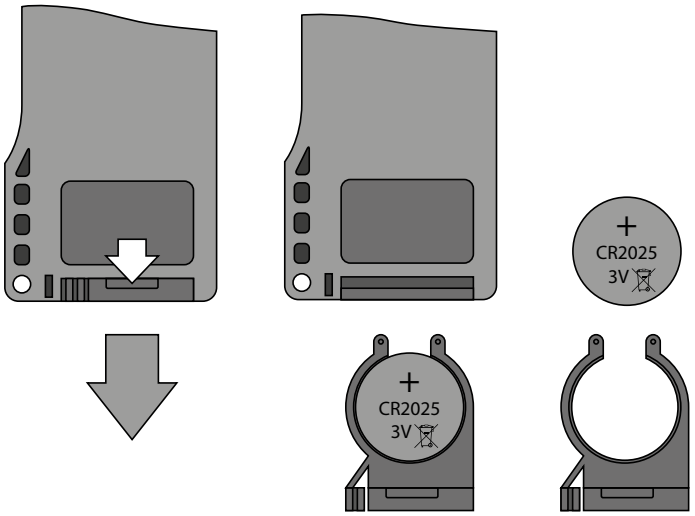

POSSIBLE FAULTS AND TROUBLESHOOTING

Problem	Possible reasons	Troubleshooting
When switching on the ventilator, the fan does not start.	No power supply.	Make sure the power supply line is connected correctly, otherwise troubleshoot the connection error.
	The motor is jammed, the impeller blades are clogged.	Turn the unit off. Troubleshoot the motor jam and impeller clogging. Clean the blades. Restart the unit.
Circuit breaker tripping during the ventilation unit start-up.	Overcurrent as a result of short circuit in the electric line.	Turn the unit off. Contact the Seller.
Low air flow.	Low set fan speed.	Set higher speed.
	The filters, the fan or the heat exchanger are clogged.	Clean or replace the filter. Clean the fan and the heat exchanger.
Noise, vibration.	The impeller is clogged.	Clean the impeller.
	Loose screw connection of the unit casing or the outer ventilation hood.	Tighten the screws of the ventilator or the outer ventilation hood.

STORAGE AND TRANSPORTATION REGULATIONS

- Store the unit in the manufacturer's original packaging box in a dry closed ventilated premise with temperature range from +5 °C to + 40 °C and relative humidity up to 70 %.
- Storage environment must not contain aggressive vapors and chemical mixtures provoking corrosion, insulation, and sealing deformation.
- Use suitable hoist machinery for handling and storage operations to prevent possible damage to the unit.
- Follow the handling requirements applicable for the particular type of cargo.
- The unit can be carried in the original packaging by any mode of transport provided proper protection against precipitation and mechanical damage. The unit must be transported only in the working position.
- Avoid sharp blows, scratches, or rough handling during loading and unloading.
- Prior to the initial power-up after transportation at low temperatures, allow the unit to warm up at operating temperature for at least 3-4 hours.

MANUFACTURER'S WARRANTY

The product is in compliance with EU norms and standards on low voltage guidelines and electromagnetic compatibility. We hereby declare that the product complies with the provisions of Electromagnetic Compatibility (EMC) Directive 2014/30/EU of the European Parliament and of the Council, Low Voltage Directive (LVD) 2014/35/EU of the European Parliament and of the Council and CE-marking Council Directive 93/68/EEC. This certificate is issued following test carried out on samples of the product referred to above.
The manufacturer hereby warrants normal operation of the unit for 24 months after the retail sale date provided the user's observance of the transportation, storage, installation, and operation regulations. Should any malfunctions occur in the course of the unit operation through the Manufacturer's fault during the guaranteed period of operation, the user is entitled to get all the faults eliminated by the manufacturer by means of warranty repair at the factory free of charge. The warranty repair includes work specific to elimination of faults in the unit operation to ensure its intended use by the user within the guaranteed period of operation. The faults are eliminated by means of replacement or repair of the unit components or a specific part of such unit component.

The warranty repair does not include:
- routine technical maintenance
- unit installation/dismantling
- unit setup

To benefit from warranty repair, the user must provide the unit, the user's manual with the purchase date stamp, and the payment paperwork certifying the purchase. The unit model must comply with the one stated in the user's manual. Contact the Seller for warranty service.

The manufacturer's warranty does not apply to the following cases:
- User's failure to submit the unit with the entire delivery package as stated in the user's manual including submission with missing component parts previously dismounted by the user.
- Mismatch of the unit model and the brand name with the information stated on the unit packaging and in the user's manual.
- User's failure to ensure timely technical maintenance of the unit.
- Damage to the unit casing and internal components caused by the user.
- Redesign or engineering changes to the unit.
- Replacement and use of any assemblies, parts and components not approved by the manufacturer.
- Unit misuse.
- Violation of the unit installation regulations by the user.
- Violation of the unit control regulations by the user.
- Unit connection to power mains with a voltage different from the one stated in the user's manual.
- Unit breakdown due to voltage surges in power mains.
- Discretionary repair of the unit by the user.
- Unit repair by any persons without the manufacturer's authorization.
- Expiration of the unit warranty period.
- Violation of the unit transportation regulations by the user.
- Violation of the unit storage regulations by the user.
- Wrongful actions against the unit committed by third parties.
- Unit breakdown due to circumstances of insuperable force (fire, flood, earthquake, war, hostilities of any kind, blockades).
- Missing seals if provided by the user's manual.
- Failure to submit the user's manual with the unit purchase date stamp.
- Missing payment paperwork certifying the unit purchase.

FOLLOWING THE REGULATIONS STIPULATED HEREIN WILL ENSURE A LONG AND TROUBLE-FREE OPERATION OF THE UNIT

USER'S WARRANTY CLAIMS SHALL BE SUBJECT TO REVIEW ONLY UPON PRESENTATION OF THE UNIT, THE PAYMENT DOCUMENT AND THE USER'S MANUAL WITH THE PURCHASE DATE STAMP

CERTIFICATE OF ACCEPTANCE

Unit Type	Single Room Heat Recovery Ventilation Unit
Model	
Serial Number	
Manufacture Date	
Quality Inspector's Stamp	

SELLER INFORMATION

Seller	
Address	
Phone Number	
E-mail	
Purchase Date	
This is to certify acceptance of the complete unit delivery with the user's manual. The warranty terms are acknowledged and accepted.	
Customer's Signature	

Seller's Stamp

INSTALLATION CERTIFICATE

The _____ unit is installed pursuant to the requirements stated in the present user's manual.		
Company name		
Address		
Phone Number		
Installation Technician's Full Name		
Installation Date:	**Signature:**	
The unit has been installed in accordance with the provisions of all the applicable local and national construction, electrical and technical codes and standards. The unit operates normally as intended by the manufacturer.		
Signature:		

Installation Stamp

WARRANTY CARD

Unit Type	Single Room Heat Recovery Ventilation Unit
Model	
Serial Number	
Manufacture Date	
Purchase Date	
Warranty Period	
Seller	

Seller's Stamp



BLAUBERG

Manufacturer: Ventilation Systems LLC,
Ukraine, Kyiv, 1 M. Kotsyubynskoho Street
Address of production facilities:
Ukraine, Kyiv Region, Fastiv District, Boyarka, 36 Sobornosti Street

https://blaubergventilatoren.net/
B259EN-06