

AXIAL FAN

EN

Deco

User's manual

BLAUBERG

EN

CONTENTS

Delivery set 5
Brief description 5
Operation guidelines 5
Designation key 5
Mounting and set-up 7
Electronics operation algorithm 10
Connection to power mains 11
Technical maintenance 11
Troubleshooting 12
Storage and transportation regulations 12
Manufacturer's warranty 13

This user's manual is a main operating document intended for technical, maintenance, and operating staff.
The manual contains information about purpose, technical details, operating principle, design, and installation of the Deco unit and all its modifications.
Technical and maintenance staff must have theoretical and practical training in the field of ventilation systems and should be able to work in accordance with workplace safety rules as well as construction norms and standards applicable in the territory of the country.



READ THE USER'S MANUAL CAREFULLY BEFORE PROCEEDING WITH INSTALLATION WORKS.
COMPLIANCE WITH THE MANUAL REQUIREMENTS ENSURES RELIABLE OPERATION AND LONG SERVICE LIFE OF THE UNIT. KEEP THE USER'S MANUAL AVAILABLE AS LONG AS YOU USE THE UNIT. YOU MAY NEED TO REREAD THE INFORMATION ON THE PRODUCT SERVICING.

This unit is not intended for use by persons (including children) with reduced physical, sensory or mental capabilities, or lack of experience and knowledge, unless they have been given supervision or instruction concerning use of the unit by a person responsible for their safety.
Children should be supervised to ensure that they do not play with the unit.
This appliance can be used by children aged from 8 years and above and persons with reduced physical, sensory or mental capabilities or lack of experience and knowledge if they have been given supervision or instruction concerning use of the appliance in a safe way and understand the hazards involved.
Cleaning and user maintenance shall not be done by children without supervision.
Children shall not play with the appliance.

Precautions must be taken to avoid the back-flow of gases into the room from the open flue of gas or other fuel-burning appliances.

Connection to the mains must be made through a disconnecting device, which is integrated into the fixed wiring system in accordance with the wiring rules for design of electrical units, and has a contact separation in all poles that allows for full disconnection under overvoltage category III conditions.

Ensure that the unit is switched off from the supply mains before removing the guard.

Do not attach the product to the support using glue or adhesives. Use only the fastening method specified in the "User's manual".

All operations described in this manual must be performed by qualified personnel only, properly trained and qualified to install, make electrical connections and maintain ventilation units.
Do not attempt to install the product, connect it to the mains, or perform maintenance yourself.
This is unsafe and impossible without special knowledge.
Disconnect the power supply prior to any operations with the unit.
All user's manual requirements as well as the provisions of all the applicable local and national construction, electrical, and technical norms and standards must be observed when installing and operating the unit.
Disconnect the unit from the power supply prior to any connection, servicing, maintenance, and repair operations.
Connection of the unit to power mains is allowed by a qualified electrician with a work permit for the electric units up to

1000 V after careful reading of the present user's manual.
Check the unit for any visible damage of the impeller, the casing, and the grille before starting installation. The casing internals must be free of any foreign objects that can damage the impeller blades.
While mounting the unit, avoid compression of the casing! Deformation of the casing may result in motor jam and excessive noise.
Misuse of the unit and any unauthorised modifications are not allowed.
Transported air must not contain any dust or other solid impurities, sticky substances, or fibrous materials.
Do not use the unit in a hazardous or explosive environment containing spirits, gasoline, insecticides, etc.
Do not close or block the intake or extract vents in order to ensure the efficient air flow.
Do not sit on the unit and do not put objects on it.
The information in this user's manual was correct at the time of the document's preparation.
The Company reserves the right to modify the technical characteristics, design, or configuration of its products at any time in order to incorporate the latest technological developments.
Never touch the unit with wet or damp hands.
Never touch the unit when barefoot.
Do not install or use the product until all construction and finishing work has been completed in the room where it is to be installed.
BEFORE INSTALLING ADDITIONAL EXTERNAL DEVICES, READ THE RELEVANT USER MANUALS.



THE PRODUCT MUST BE DISPOSED SEPARATELY AT THE END OF ITS SERVICE LIFE.
DO NOT DISPOSE THE UNIT AS UNSORTED DOMESTIC WASTE.

DELIVERY SET

Fan – 1 pc.
Plastic screwdriver (only for the models with a timer) – 1 pc.
User's manual – 1 pc.
Packing box – 1 pc.

BRIEF DESCRIPTION

The product is an axial fan for exhaust ventilation of small and medium-sized domestic premises. The fan is designed for wall or ceiling mounting. The fan is intended for a duct diameter of 100, 125, or 150 mm depending on the model.

OPERATION GUIDELINES

The fan is designed for connection to power mains with the parameters specified on the package and/or label on the unit casing.
Ingress protection rating against access to hazardous parts and water ingress is IP 34.
WARNING! The ingress protection rating is specified for the mounted unit.
The fan is rated for operation at the ambient temperature ranging from +1 °C up to +40 °C.
WARNING! Do not operate the fan beyond the specified temperature range.
The unit is rated as a Class II electrical appliance.

DESIGNATION KEY

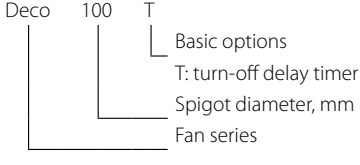

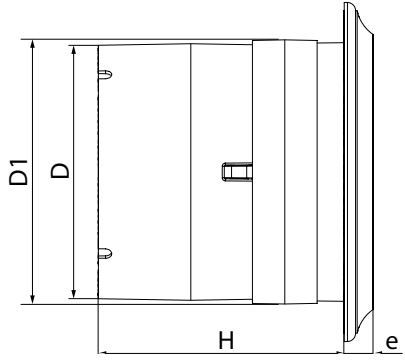

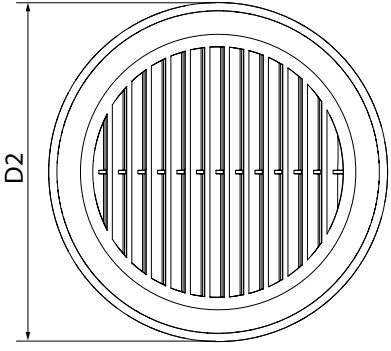

	D	D1	D2	H	e	Weight, kg
Deco 100	100	104	140	129	14	0,53
Deco 125	125	129	165	134	14	0,59
Deco 150	150	154	189	145	14	1,0

MOUNTING AND SET-UP

The fan is designed for wall or ceiling mounting. In case of installation via a duct system, select the duct cross-section according to the size of the fan.
To reduce the risk of condensation in the duct, it is mandatory to insulate the space between the wall opening and the duct. The duct must be sloped downward toward the outside by 1...2 degrees to allow condensation to drain outdoors if it occurs. The duct system must not exceed 5 meters in length and must not have more than two bends.

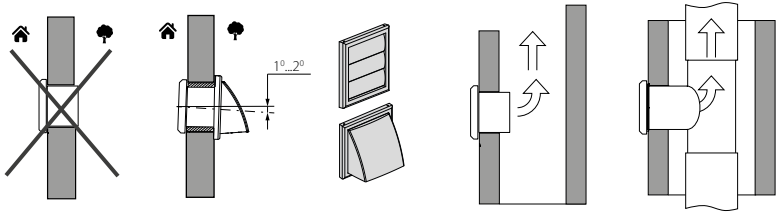

In the case of ceiling mounting, discharging air vertically upward is prohibited, even if a protective roof cowl is installed. Before installing the fan, make sure that there is no damage to the impeller or casing, and that there are no foreign objects inside the fan casing that could damage the impeller blades.
Avoid squeezing the casing during fan installation! Deformation of the casing may cause impeller jamming and increased noise.

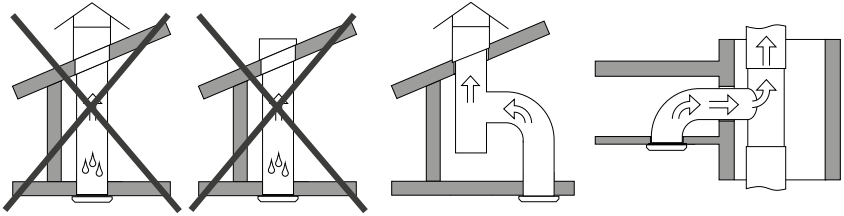

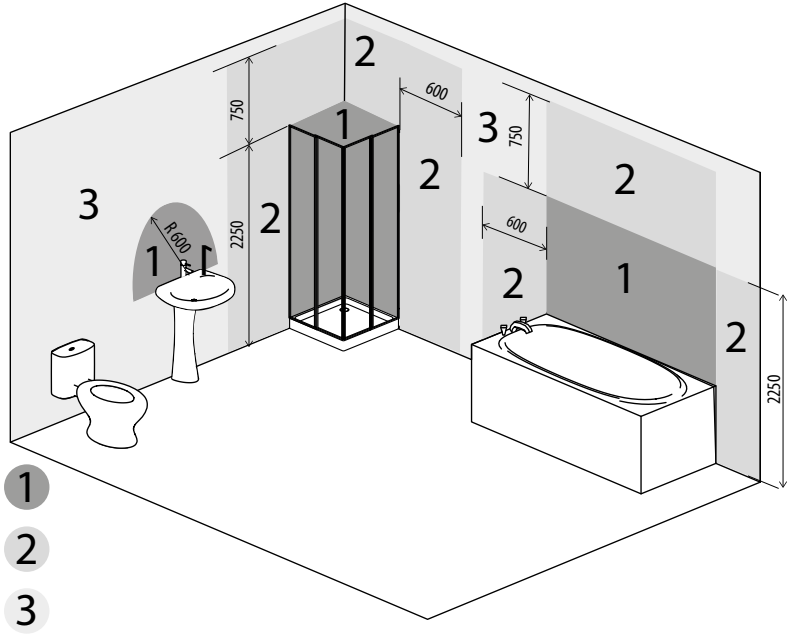

A product with an IP 34 rating for protection against access to hazardous parts and water ingress may be installed in Zone 2 in accordance with IEC 60364-7-701:2019.

Remove the front panel. Remove the terminal compartment cover. Mark and drill the holes for securing the fan. Route the power cable to the ventilation opening. Since the cable enters the fan from the side, it should be routed through the ventilation duct opening. Connect the fan to the mains according to the wiring diagram. Secure the cable. Fasten the fan. Reassemble the fan in reverse order.

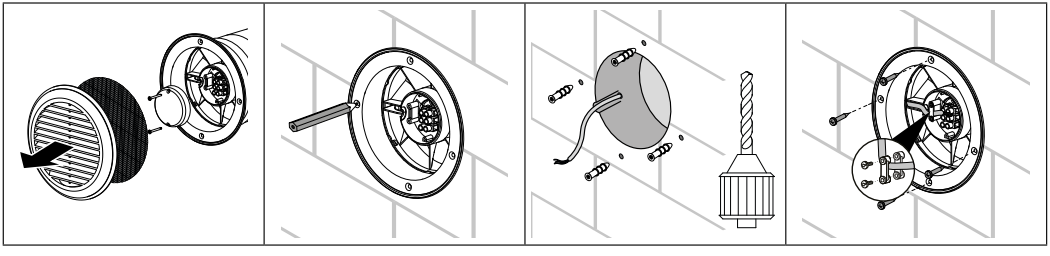

Anchors and screws are designed for concrete and brick walls. If the walls are made of a different material (drywall, wood, etc.), use fasteners suitable for those materials to mount the fan (these are not included with the fan and must be purchased separately).

WARNING! The power cable may only be laid through the hole in the casing provided by the manufacturer. Laying the power cable through a manually drilled hole will not be the liability of the manufacturer and will void the warranty. The wires must be stripped of insulation by a maximum of 8 mm.

After installation, pass this User's manual to the end user for reading.

ELECTRONICS OPERATION ALGORITHM

The fan with the T timer activates upon control voltage application to the **LT** input terminal by the **S** external switch (e.g. indoor light switch). After the control voltage is off, the fan continues to operate within the time set by the timer ranging from 2 to 30 minutes.

To adjust the fan turn-off delay time, turn the control knob **T** clockwise to increase and counter-clockwise to decrease the turn-off delay time respectively, adjustable from 2 up to 30 minutes.

The fan delivery set includes a specially designed plastic screwdriver for fan settings adjustments.
Use it to change the fan turn-off delay time.

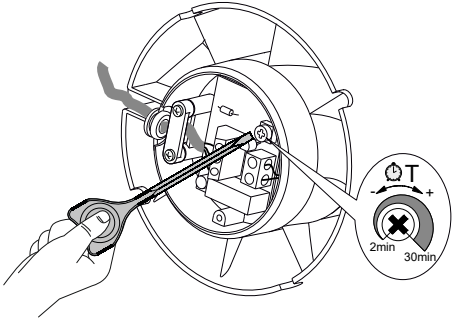

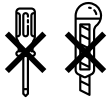

DO NOT USE A METAL SCREWDRIVER, KNIFE, ETC. FOR ADJUSTMENT OPERATIONS NOT TO DAMAGE THE CIRCUIT BOARD

CONNECTION TO POWER MAINS

Deco

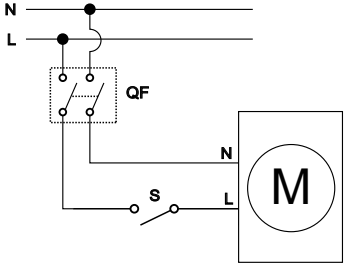

Deco T

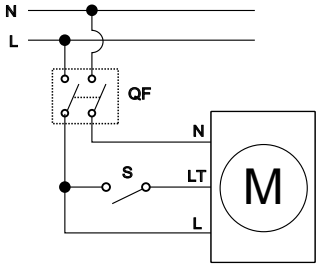

N — neutral; L — phase; LT — timer control line; S — external switch; QF — double-pole switch

TECHNICAL MAINTENANCE

Maintenance work must be carried out at least once every 6 months.
Maintenance sequence:

- remove the front panel;
- clean the fan with a soft dry cloth or brush;
- rinse the front panel under running water, wipe the fan surfaces dry;
- reassemble the fan in reverse order.

WARNING! Do not allow liquid to get on electrical components!

TROUBLESHOOTING

Problem	Possible reasons	Troubleshooting
When the unit is connected to power mains, the fan does not rotate and does not respond to any controls.	No power supply.	Make sure the power supply line is connected correctly, otherwise troubleshoot a connection error.
	Internal connection fault.	Contact the Seller.
Low air flow.	The ventilation system is clogged.	Clean the ventilation system.
Increased noise, vibration.	The impeller is clogged.	Clean the impeller.
	The fan is not secured well or is not mounted properly.	Troubleshoot the installation error.
	The ventilation system is clogged.	Clean the ventilation system.

STORAGE AND TRANSPORTATION REGULATIONS

- Store the unit in the manufacturer's original packaging box in a dry closed ventilated premise with temperature range +5 ˚C ... +40 ˚C and relative humidity up to 70 %.
- Storage environment must not contain aggressive vapors and chemical mixtures provoking corrosion, insulation, and sealing deformation.
- Use suitable hoist machinery for handling and storage operations to prevent possible damage to the unit.
- Follow the handling requirements applicable for the particular type of cargo.
- The unit can be carried in the original packaging by any mode of transport provided proper protection against precipitation and mechanical damage. The unit must be transported only in the working position.
- Avoid sharp blows, scratches, or rough handling during loading and unloading.
- Prior to the initial power-up after transportation at low temperatures, allow the unit to warm up at operating temperature for at least 3-4 hours.

MANUFACTURER'S WARRANTY

The product is in compliance with EU norms and standards on low voltage guidelines and electromagnetic compatibility. We hereby declare that the product complies with the provisions of Electromagnetic Compatibility (EMC) Directive 2014/30/EU of the European Parliament and of the Council, Low Voltage Directive (LVD) 2014/35/EU of the European Parliament and of the Council and CE-marking Council Directive 93/68/EEC. This certificate is issued following test carried out on samples of the product referred to above.

The manufacturer hereby warrants normal operation of the unit for 24 months after the retail sale date provided the user's observance of the transportation, storage, installation, and operation regulations. Should any malfunctions occur in the course of the unit operation through the Manufacturer's fault during the guaranteed period of operation, the user is entitled to get all the faults eliminated by the manufacturer by means of warranty repair at the factory free of charge. The warranty repair includes work specific to elimination of faults in the unit operation to ensure its intended use by the user within the guaranteed period of operation. The faults are eliminated by means of replacement or repair of the unit components or a specific part of such unit component.

The warranty repair does not include:

- routine technical maintenance
- unit installation/dismantling
- unit setup

To benefit from warranty repair, the user must provide the unit, the user's manual with the purchase date stamp, and the payment paperwork certifying the purchase. The unit model must comply with the one stated in the user's manual. Contact the Seller for warranty service.

The manufacturer's warranty does not apply to the following cases:

- User's failure to submit the unit with the entire delivery package as stated in the user's manual including submission with missing component parts previously dismounted by the user.
- Mismatch of the unit model and the brand name with the information stated on the unit packaging and in the user's manual.
- User's failure to ensure timely technical maintenance of the unit.
- Damage to the unit casing and internal components caused by the user.
- Redesign or engineering changes to the unit.
- Replacement and use of any assemblies, parts and components not approved by the manufacturer.

- Unit misuse.
- Violation of the unit installation regulations by the user.
- Violation of the unit control regulations by the user.
- Unit connection to power mains with a voltage different from the one stated in the user's manual.
- Unit breakdown due to voltage surges in power mains.
- Discretionary repair of the unit by the user.
- Unit repair by any persons without the manufacturer's authorization.
- Expiration of the unit warranty period.
- Violation of the unit transportation regulations by the user.
- Violation of the unit storage regulations by the user.
- Wrongful actions against the unit committed by third parties.
- Unit breakdown due to circumstances of insuperable force (fire, flood, earthquake, war, hostilities of any kind, blockades).
- Missing seals if provided by the user's manual.
- Failure to submit the user's manual with the unit purchase date stamp.
- Missing payment paperwork certifying the unit purchase.



FOLLOWING THE REGULATIONS STIPULATED HEREIN WILL ENSURE A LONG AND TROUBLE-FREE OPERATION OF THE UNIT



USER'S WARRANTY CLAIMS SHALL BE SUBJECT TO REVIEW ONLY UPON PRESENTATION OF THE UNIT, THE PAYMENT DOCUMENT AND THE USER'S MANUAL WITH THE PURCHASE DATE STAMP

Quality Inspector's Stamp _____

Deco _____

Seller _____
(name and stamp of the seller)

_____

Purchase Date _____

Manufacturer: Ventilation Systems LLC,
Ukraine, Kyiv, 1 M. Kotsyubynskoho Street
Address of production facilities:
Ukraine, Kyiv Region, Fastiv District, Boyarka, 36 Sobornosti Street

BLAUBERG

www.blaubergventilatoren.de
Deco