CDT1 E

Multi-speed switch



Use

- Applied in ventilation systems for speed switching ON/OFF and speed control of single phase power-controlled motors. Several fans can be controlled synchronously in case their total current does not exceed the maximum permissible value of the controller current.

Design and control

- The controller casing is made of pastic. The control knob is equipped with the pilot light. The controller is featured with high efficiency and control accuracy. Switching is effected by means of pressing the control knob. Regulating starts from the minimum to the maximum voltage value for the fan stable running. The minimum speed is set by means of the potentiometer at the PCB. The controller is equipped with extra 230 V terminal for connection and control of the external equipment.

Protection

- Input circuit of the speed controller has a thermal fuse for overload protection. The controller is fitted with a transient filter.

Mounting

- The universal design of the controller enables its mounting either on the wall or through the wall, suitable for installation into standard round electric junction boxes.

Wiring diagram

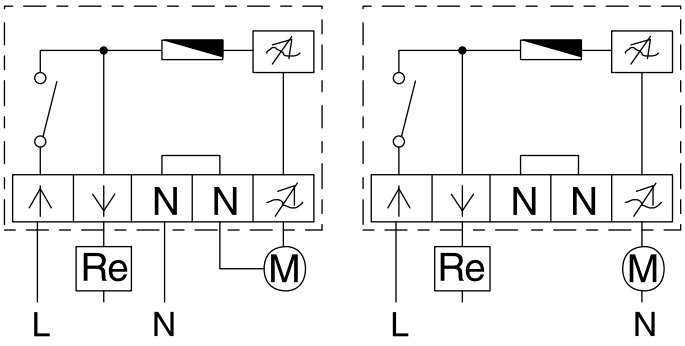

Technical data

Parameters	CDT1 E1.5	CDT1 E2.5	CDT1 E4.0
Voltage [V]	1 ~ 230	1 ~ 230	1 ~ 230
Frequency [Hz]	50	50	50
Minimum current [A]	0.15	0.25	0.4
Maximum current [A]	1.5	2.5	4.0
Overall dimensions W×H×D [mm]	82×82×65	82×82×65	82×82×65
Maximum ambient temperature [°C]	+35	+35	+35
IP rating	IP44	IP44	IP44
Weight [kg]	0.24	0.29	0.36