

AIR HANDLING UNIT

BlauAir BLS

EN USER'S MANUAL

BLAUBERG

CONTENTS

Safety requirements ... 3
Designation key ... 4
Design ... 5
Unit types and sizes ... 6
Unit components and sections ... 8
Unit transportation ... 15
Mounting ... 16
Space for maintenance ... 17
Connecting sections ... 18
Door handles ... 18
Preheater installation ... 19
Connecting the heater and cooler sections ... 20
Connecting the drain pipe ... 22
Outdoor units ... 24
Automation ... 25
Starting setup ... 25
Trial run ... 26
Technical maintenance ... 26
Final measurement of operating parameters ... 31
Storage and transportation regulations ... 31
Certificate of acceptance ... 35
Seller information ... 35
Installation certificate ... 35
Warranty card ... 35

This manual is designed for qualified professionals performing installation works on an BlauAir BLS ventilation unit.
Persons that have sufficient professional experience and knowledge on ventilation systems, their installation, as well as are qualified in electric security requirements and can work without causing collateral danger to others and the evnironment are considered qualified professionals.

This product is not compliant with the RoHS Directive (2011/65/EU) due to the presence of hazardous substances exceeding the permissible concentrations.
Warning: This product may contain substances (lead and cadmium) in concentrations that exceed the permissible limits set by the RoHS directive. This concentration is necessary for increased reliability of electrical components. Use of the product may pose risks to health and the environment, especially during disposal or waste treatment.
Warning: The product is subject to special disposal conditions and should not be disposed of with household waste. The product must be disposed of in accordance with the requirements for electronic waste at certified recycling centers authorized to handle materials containing lead and cadmium.

SAFETY REQUIREMENTS

Ventilation units can only be installed by a qualified professional in accordance with the present user's manual as well as the provisions of all the applicable legal codes and security requirements.
The ventilation unit is an electrical and mechanical device containing electrical and moving parts, so failure to follow the presented instructions in the manual voids the manufacturer's warranty and may be harmful to human health or property.



- Ensure the unit is disconnected from power mains prior to any operations.
- Be careful when working near heaters that are located in or on the unit as their surfaces may be hot.
- Install all the external nodes of the unit before connecting it to the power pains.
- Do not connect the unit to the power pains if there is any visible damage caused by transportation.
- Do not leave any foreign objects or tools inside the unit.
- Do not operate the unit in rooms with a high risk of explosive emissions.
- Use adequate individual protection means (gloves, goggles etc.) while mounting or repairing.

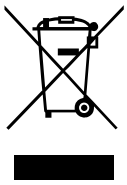

This symbol signifies that the unit cannot be disposed with unsorted domestic waste according to the Directive (2002/96/EC) and local national legal acts regarding electric waste.
This product must be disposed in an electric waste processing or collection facility. Failure to adequately process this type of waste may be harmful to environment or human health due to presence of hazardous substances.
By ensuring proper disposal of the product you contribute to reasonable use of natural resources.
If you need further details on the disposal of certain waste types, contact local authorities, waste processing facilities, representatives of certified electrical waste disposal systems or local domestic waste processing institutions.

DESIGNATION KEY

CASING SIZE

BL S____

Nominal air capacity m³/h x 1000

SILENCER TYPE

SRI — Insulated silencer

— Without silencer

PREHEATER SECTION

pHE — Electric with built-in filter

pHW — Water with built-in filter

— Without preheating function

CONFIGURATION TYPE

R2VFV(H)

FV(V)R1FV(V)

R2M2VFV(H)

R2MVFV(H)

FV(V)CFFV(V)

FV(V)CFMFV(V)

CF1VV

CF2VFV(H)

CFMVFV(H)

Configuration components

V — fan

FV(V) — fan + filtration section (connected vertically)

FV(H) — fan + filtration section (connected horizontally)

Heat exchanger type

R2 — rotary with built-in supply filter

R1 — rotary

R2M2 — rotary with built-in supply filter and recirculation

R2M — rotary with built-in supply filter and mixing chamber

CF — plate counterflow

CF1 — plate counterflow with built-in filters

CF2 — plate counterflow with built-in supply filters

CFM — plate counterflow with recirculation

HEATER TYPE

HE — Electric heater

HW — Water heater

— Without heater

COOLER TYPE

CDX — Freon cooler

CV — Water cooler

— Without cooler

SERVICE SIDE

L — Left

R — Right

CONTROL PANEL

—	A___	A___
None	Kvent with a panel	Other variants of the automation system

__* — rated capacity

DESIGN

The unit consists of a number of blocks enclosed in a casing, made of rigidly fixed heat- and sound-insulated panels, 50 mm thick, made of galvanized steel or aluzinc and filled with mineral wool. Extra structural stability may be attained due to use of a mounting frame made of rolled steel.
The automation and control system enables operation of the air handling units for air conditioning with the set parameters and controls the air handling processes for each type of the unit configuration.
The outdoor modification of the unit is designed for mounting and operation outside of the building, under the roof. The air handling unit must be equipped with a drain pipe to protect the unit against atmospheric precipitation. The drain pipe is equipped with a fine mesh to prevent ingress of mechanic objects up to 10 mm in size.
The unit design is regularly improved, so some models may slightly differ from those ones described herein.

UNIT TYPES AND SIZES

The unit's main purpose is high-quality indoor ventilation.
The ventilation unit extracts stale air from the room, along with the carbon dioxide accumulated in it, allergens, and dust, while also replacing it with fresh supply air purified by filtering.
Since supply air is often colder or warmer than indoor air, the heat exchanger that is built in the unit takes heat from the extract air and recovers most of it to the supply air.
If the power of the heat exchanger is insufficient to reach the temperature specified by the user, additional heaters / coolers may be turned on.

THE HEAT EXCHANGER AND HEATER (COOLER) ARE DESIGNED TO COMPENSATE FOR HEAT / COLD LOSSES WHILE VENTILATING ROOMS, SO IT IS NOT RECOMMENDED TO USE THE UNIT AS THE MAIN SOURCE OF HEAT / COLD FOR THE ROOM.

THE UNIT MAY NOT REACH THE SET SUPPLY AIR TEMPERATURE IF THE REAL INDOOR TEMPERATURE IS SIGNIFICANTLY DIFFERENT FROM THE DESIRED ONE, SINCE IN THIS CASE EFFICIENT OPERATION OF THE HEAT EXCHANGER CANNOT BE ENSURED.

All BLS ventilation units can be subdivided into two groups by the type of the heat exchanger used in them.

Ventilation units equipped with a rotary heat exchanger.
When the rotary heat exchanger rotates, heat or cold is removed from extract air and is transfered to the fresh supply air.
The amount of heat / cold that is recovered can be changed by adjusting the rotor speed; when heat recovery is not necessary, the rotation is stopped.

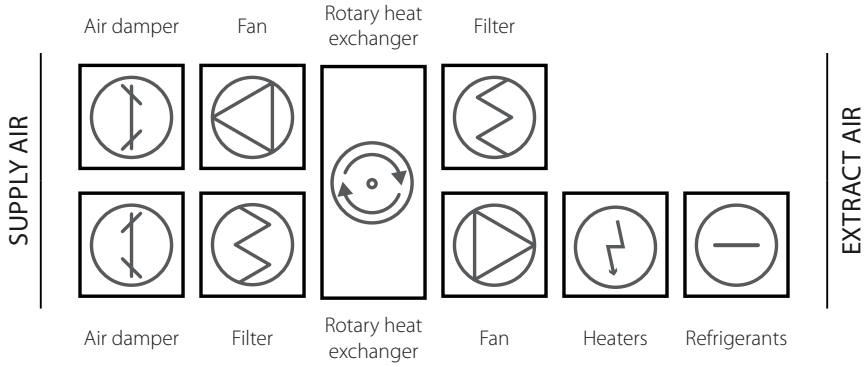

Ventilation units equipped with a plate counter-flow heat exchanger.
The plates of the heat exchanger touch both supply and extract air flows, thus enabling heat exchange between the extract air and fresh supply air.
The amount of heat / cold that is recovered can be changed by adjusting the bypass air damper's position.
If recovery is not necessary, the bypass air damper is opened.
This enables some of the supply air to pass by the heat exchanger and move straight into the room.

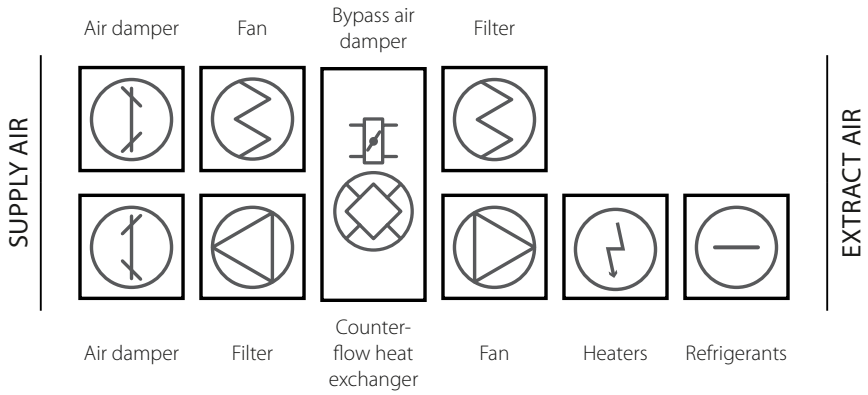

BlauAir BLS units have 11 standard sizes.
Each standard size is designed to provide a certain range of air flow:

Standard size	**BLS 10**	**BLS 20**	**BLS 30**	**BLS 40**	**BLS 55**	**BLS 65**	**BLS 75**	**BLS 95**	**BLS 120**	**BLS 140**	**BLS 180**
Rated air flow [m^3/h]	1000	2050	3000	3950	5400	6800	7550	9350	11850	14150	18200

Maximum air flow in the unit can be limited upon request, for example, if the fans used are not as powerful, or if the project does not require a greater air flow. The exact maximum air flow value is specified individually for each unit in its technical data section.

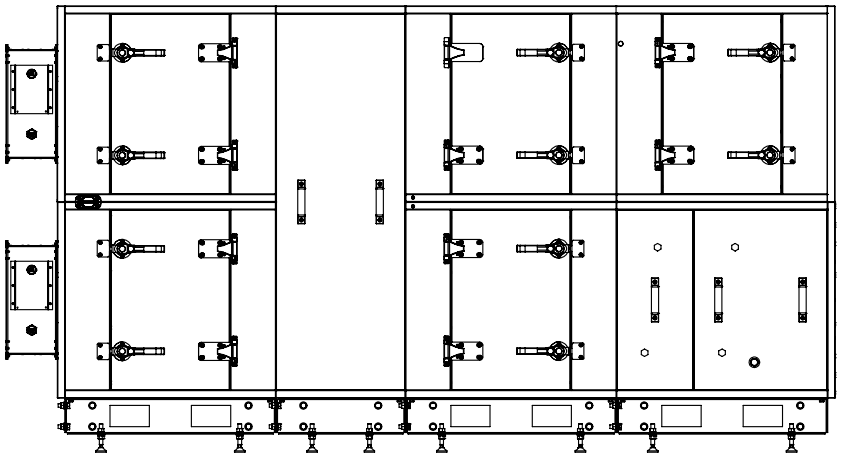

Service side view

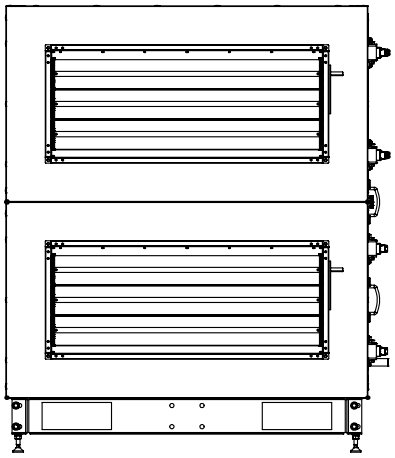

Side view

UNIT COMPONENTS AND SECTIONS

Ventilation units are composed of separate sections.
Depending on the order volume and the size of the unit, sections can be connected upon manufacturing or delivered separately.

Fan filter section

Units that are equipped with a rotary heat exchanger and a plate heat exchanger are provided with joint fan filter sections.
A unit design where filters and fans are mounted separately is also available.

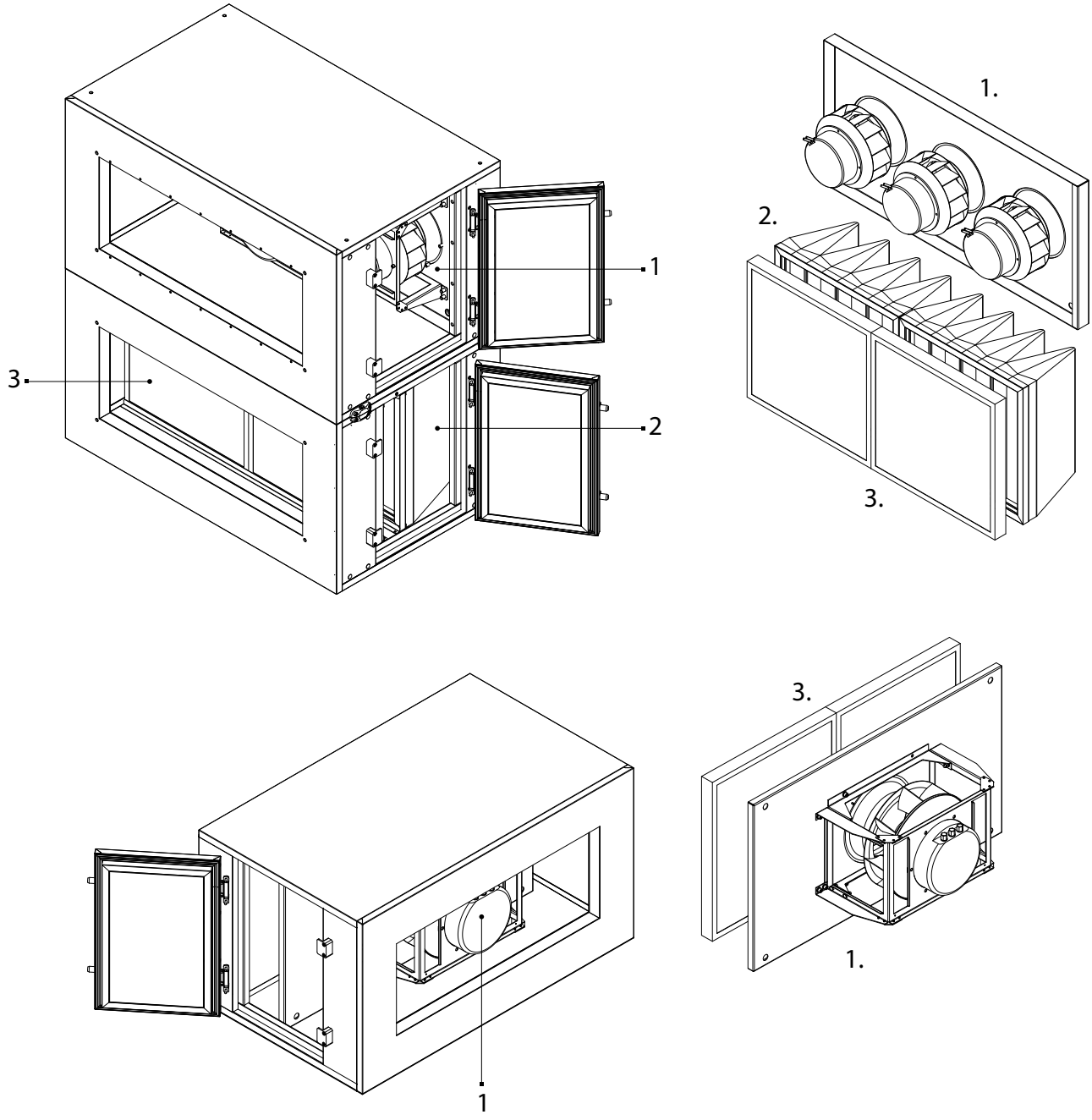

Fan filter section

1 — fan node with a base frame; 2 — bag filters; 3 — panel (cassette) filters

Plate counter-flow heat exchanger section

The processes of transferring heat from warm extract air to cold supply air may cause condensation in the heat exchanger.
The heat exchanger may be exposed to icing at low air temperatures.
In order to avoid freezing or to defrost, a bypass air damper is installed in the heat exchanger.
The condensate that forms is collected in the drain pan, from which condensate drainage must be arranged into the sewage system.

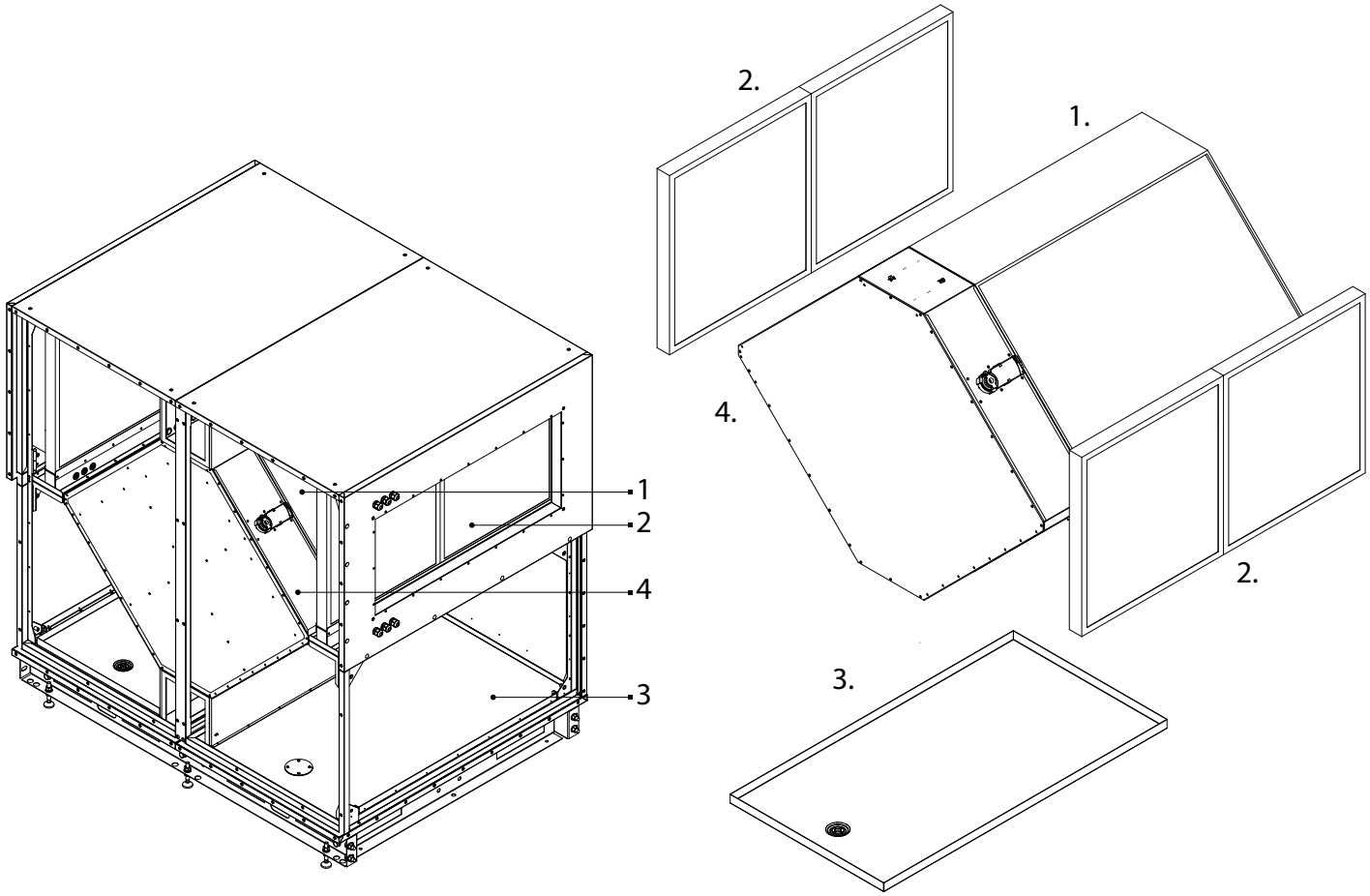

Counter-flow plate heat exchanger section

1 – counter-flow heat exchanger, 2 — panel (cassette) filters, 3 — drain pans, 4 — bypass air damper unit

Rotary heat exchanger section

The rotary heat exchanger is rotated by the motor equipped with a reducer and a belt.
Around the perimeter of the rotor and in the gap between air flows, brushes are mounted to prevent the air flows from mixing.

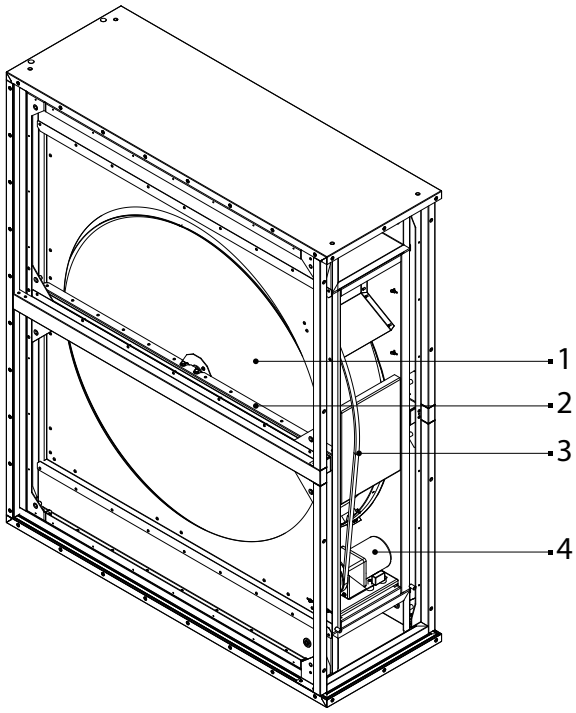

Rotary heat exchanger section

1 — rotor, 2 —rotor brushes, 3 — rotor belt, 4 — motor with a reducer

Air recirculation section

Air recirculation section is designed to mix extract and supply air in order to warm it up or cool it down, allowing to save heat / cold energy.

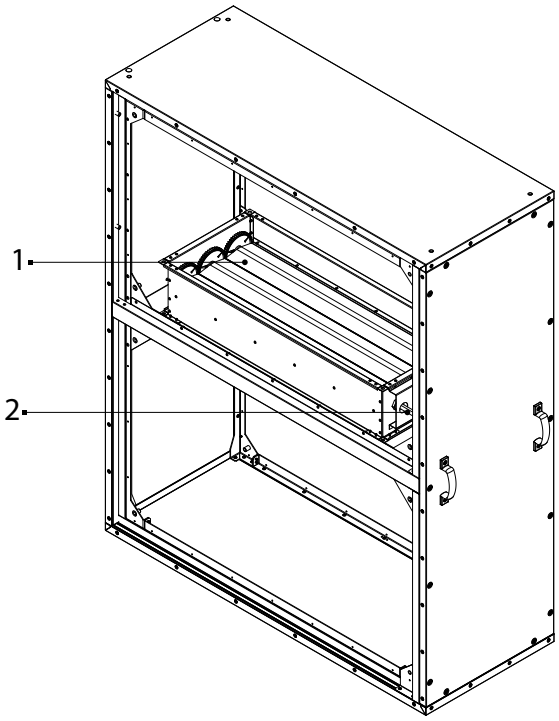

Air recirculation section

1 — mixing air damper; 2 — air damper actuator

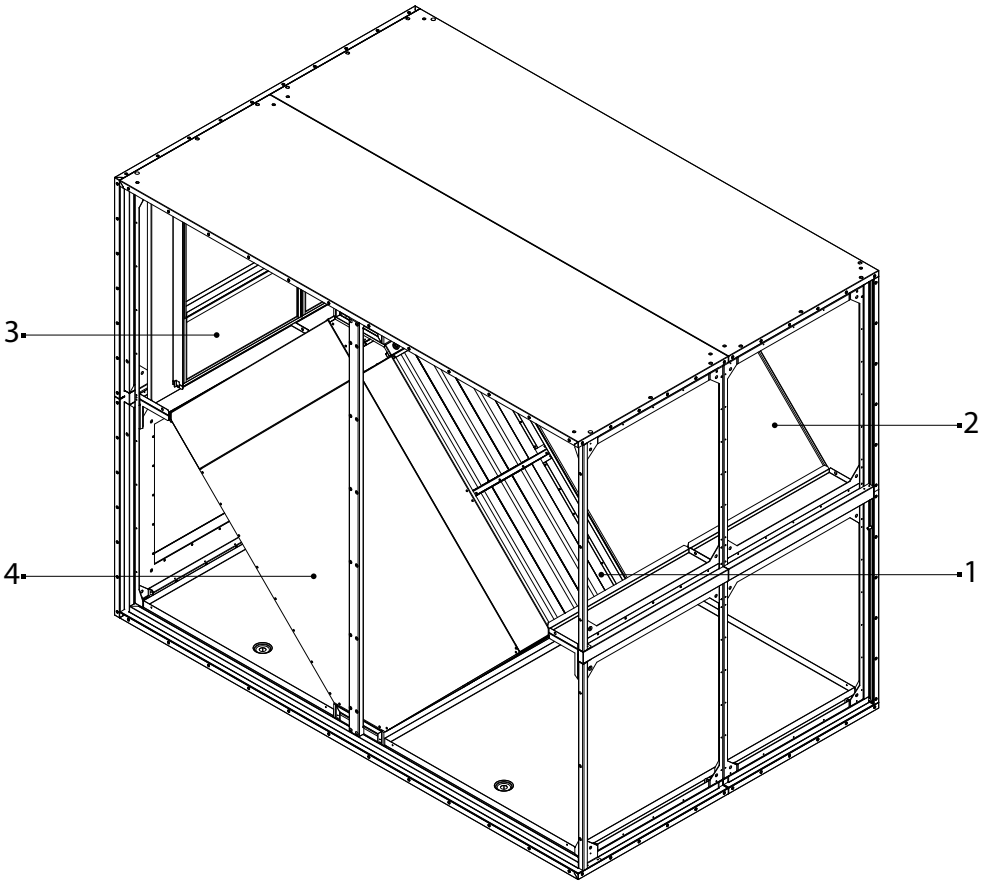

Plate heat exchanger (equipped with a recirculation air damper) section

1 — mixing air damper with an actuator, 2 — heat exchanger, 3 — filters, 4 — bypass

Sections of coolers and heaters

DX (water or freon) heat exchangers and combined ("2-in-1") heaters / coolers are installed in the cooling sections.
Due to condensation that is formed as the air cools down, a drain pan is installed under the heat exchanger.
If the air velocity in the ventilation unit is too high(>2 m/s), a droplet separator is installed that prevents condentsate from penetrating through other sections of the unit or air ducting system.

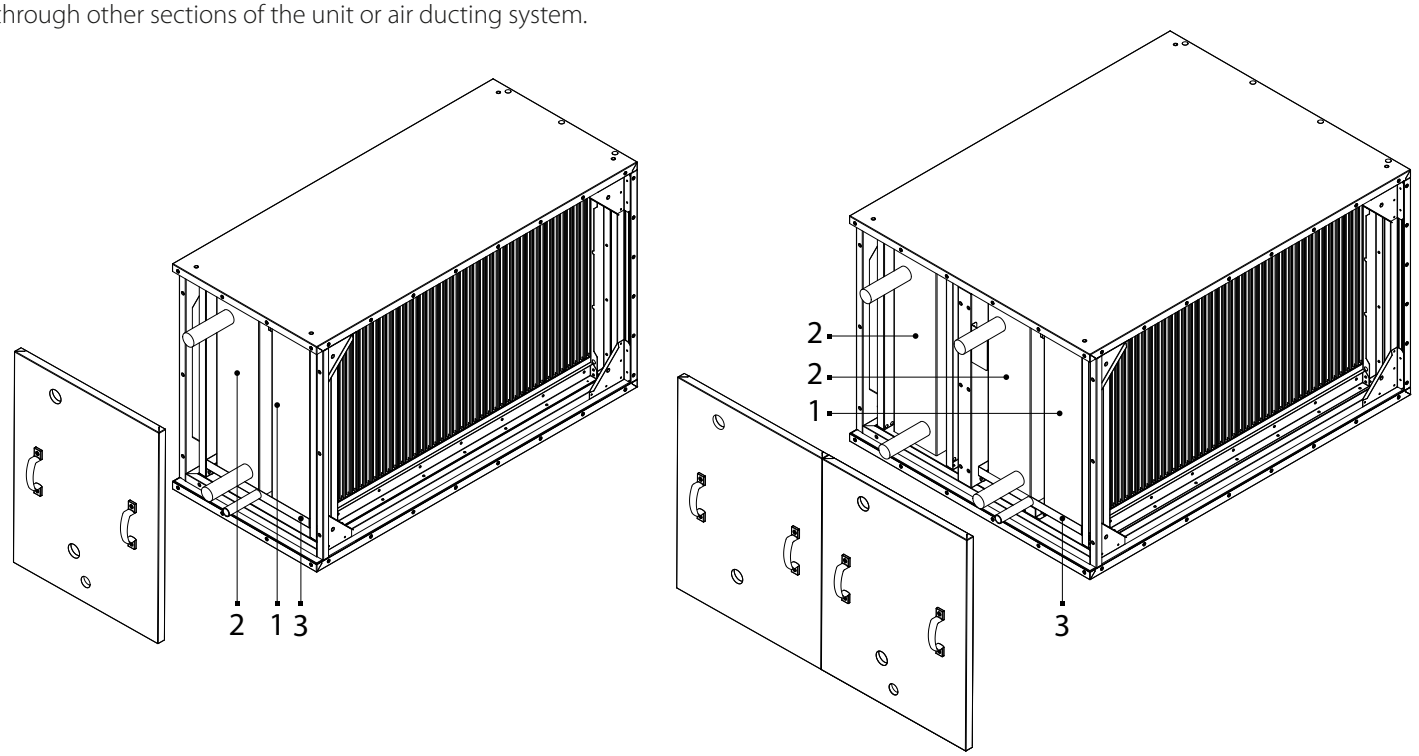

1 –Water cooler section

1 — droplet separator, 2 — water / DX heat exchanger, 3 — air damper

Depending on the order, water heaters and electric heaters are available.
A water heater is equipped with a temperature sensor of backflow water and a thermostat, which are used for heat exchanger's frost protection.

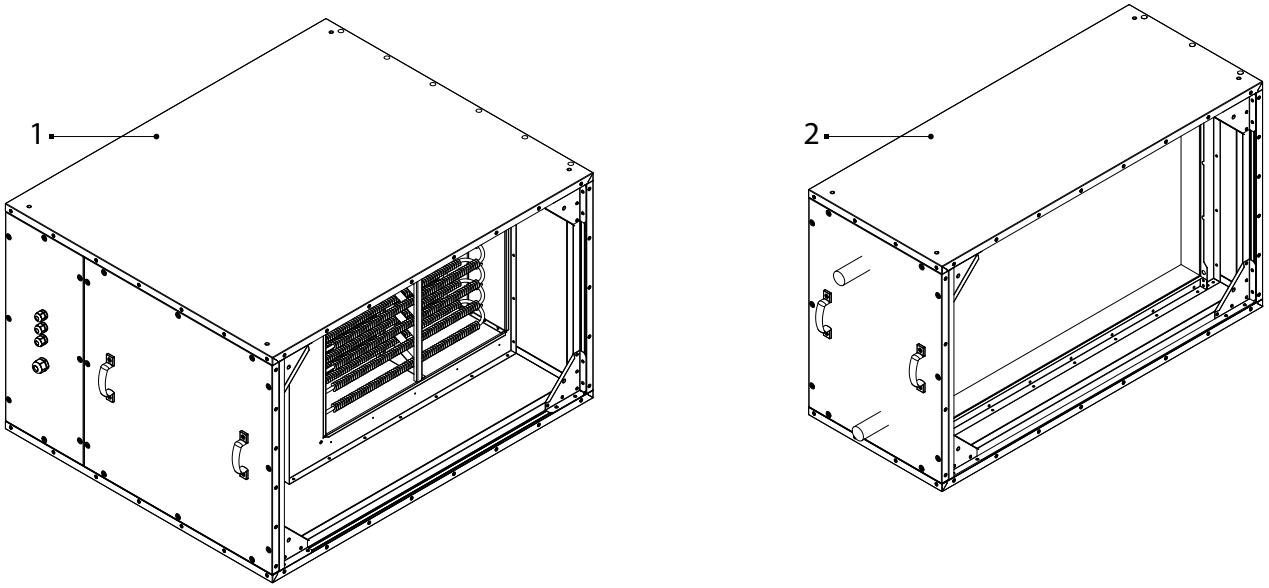

Heater section

1 — electric heater section, 2 — water heater section

Air dampers

Air dampers are installed outside of the unit and attached with screws.
Air dampers are designed to isolate and protect the unit from collateral air flows and drafts, when the unit is not operating.
Moving plates of the air dampers are opened / closed using an actuator, whose power and torque are selected depending on the size of the air damper.
Rectangular ducts can be attached straight to air dampers.
For outdoor units, air dampers as well as the actuators must be protected from exposure to weather conditions by installing them in individual unit sections.

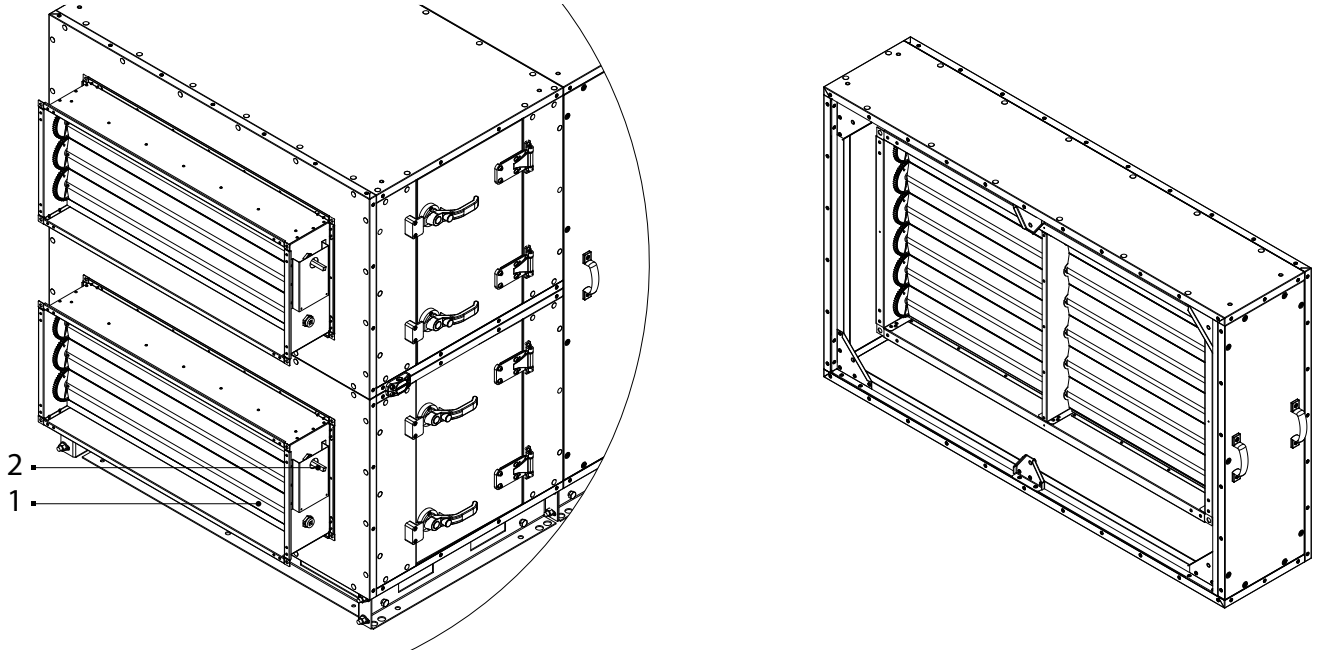

Closing air dampers

1 — movable plates of the damper, 2 — air damper actuator

Silencer section

The silencer section is designed to decrease the volume of sound that is made by the fans of the ventilation unit and air flow.
Inside the silencer section, noise absorbing inserts are installed, which can be removed and cleaned during maintenance.

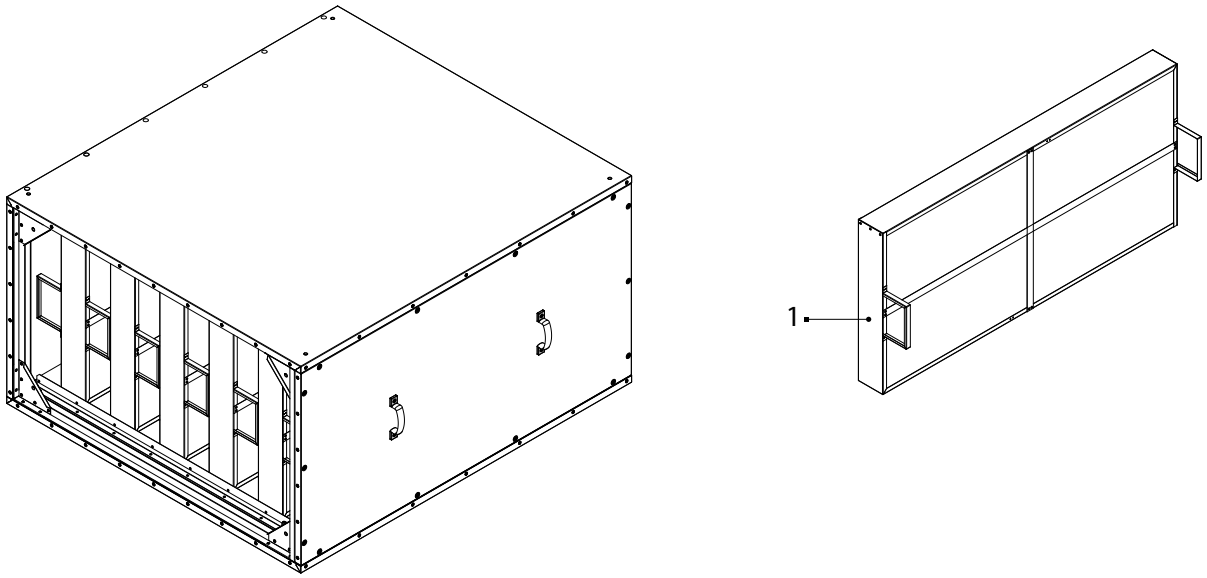

Silencer section

1 — removable noise absorbing inserts

Service access side

Depending on the mounting position and air duct connection, ventilation units may have two service sides.

The air duct supplying air to the room is connected on the service side.
The supply air duct is connected on **the bottom left part** of the unit.

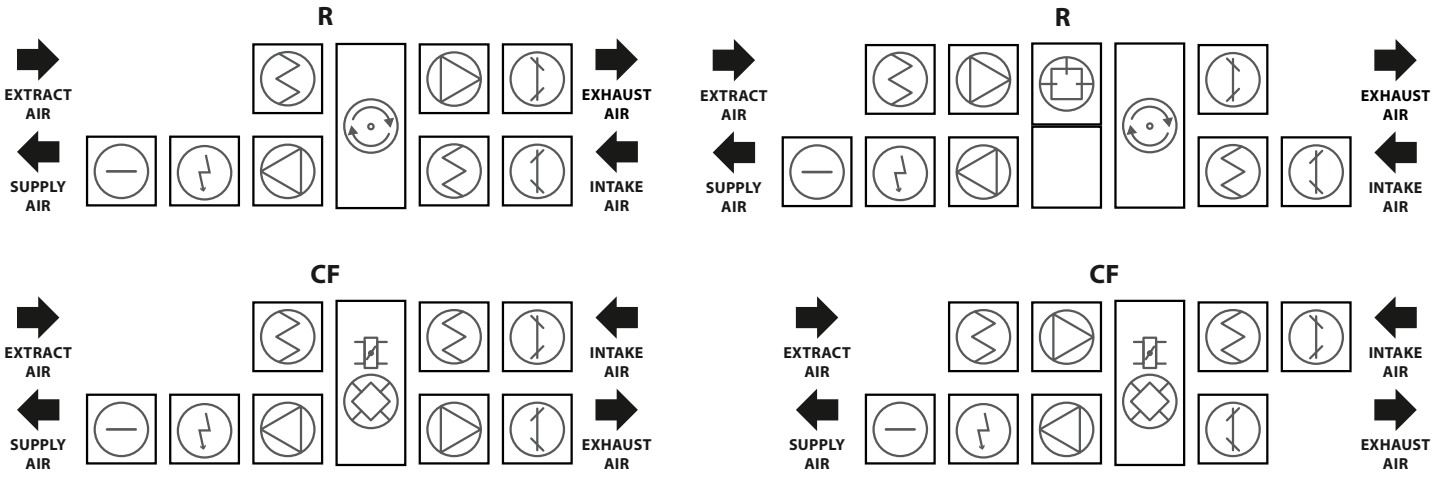

The supply air duct is connected on **the bottom right part** of the unit.

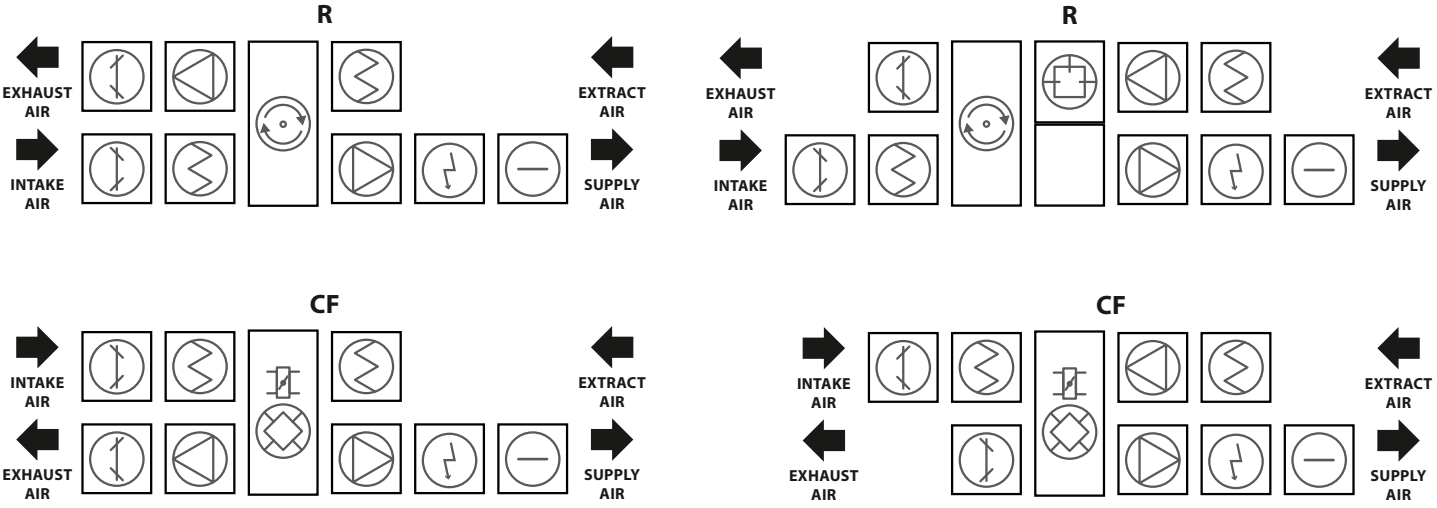

UNIT TRANSPORTATION

Store and transport the unit in the manufacturer's original packaging box only.
Adequately secure the units before transporting and set additional protection to prevent potential mechanical damage or precipitation ingress.
Hoisting and handling operations can only be performed by qualified professionals authorized to handle hoisting equipment and knows the corresponding principles and security requirements.
When using a forklift truck to hoist and transport units, its forks must be long enough to avoid rolling over or damaging the bottom of the casing of the unit being lifted.

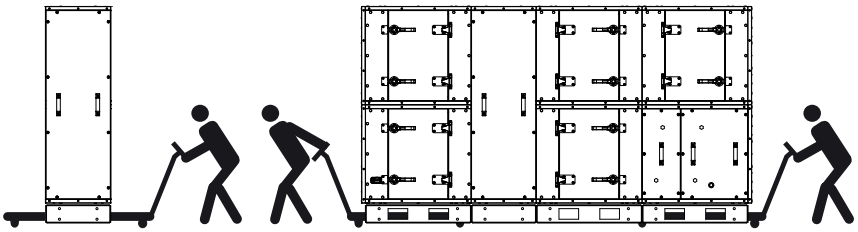

Depending on the standard size and weight of the unit (all the details are specified on labels on the unit), it can be loaded or unloaded using special transporting equipment: a crane, cross-bar or forklift truck.
When using a crane for handling operations, use the designed holes in the equipment's base.
To protect the sides of the equipment, protective bars are installed on the unit. The length varies depending on the unit size.
A cross-bar is also designed for handling operations.
Regardless of the equipment used, the side panels must always be protected to prevent damage by the forklift or cables.

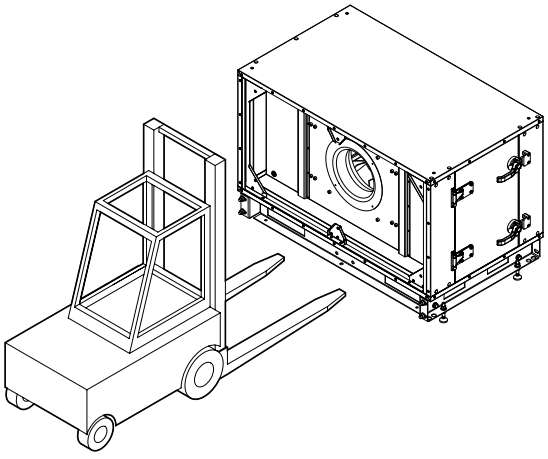

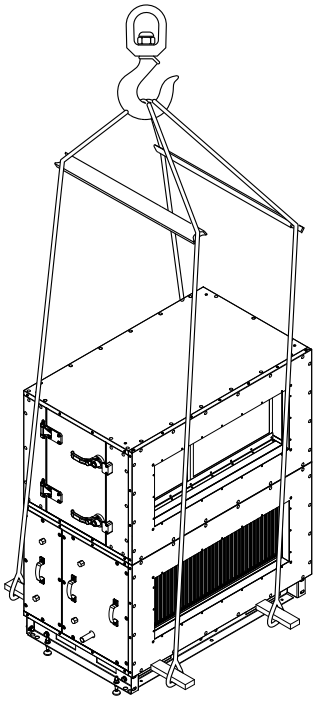

Units are either delivered in individual sections, or in modules (a module consists of several sections).
Modules may require an extra palette to be loaded. In this case, specially designed holes in the palette must be used for unloading.

ATTENTION! A ready-to-use unit cannot be transported without using an additional palette or a similar device to account for its weight, dimensions, subdivision into sections and equal load distribution.

MOUNTING

Installation site and unit base requirements

BLS ventilation units are designed for ventilation of large and medium-sized commercial and industrial premises (e.g. shops, offices, hotels etc.) where rated temperatures and humidity are maintained.
The units are not designed to transfer airborne particulate matter.
The ventilation units of standard assembly are mounted indoors, whereas ones that require accessories are mounted outdoors.
The units are rated for operation at the ambient temperature ranging from -60 °C up to + 60 °C.

- Do not operate BLS ventilation units in environments with potential risk of explosive emissions. The units are not designed to ventilate or dry wet rooms (water pools, baths, car washes etc.).
- If a unit is installed in a highly humid room, in cold weather, condensation may occur on the unit's casing walls.

The ventilation unit must be mounted on a sufficiently massive and durable base to account for the unit's weight in compliance with the construction norms.
The base can be made of reinforced concrete or assembled from metal structures.
The unit must be mounted on a smooth base, unless it is equipped with adjustable legs.
Anti-vibration connectors must be installed in the gap between the unit and the mounting base.
If the unit is designed with no base frame or adjustable legs, it must be attached to a base using metal L-shaped corners and rubber anti-vibration connectors.
Outdoor-mounted ventilation units must also be attached to the base.
When mounting the unit, its sections must always be horizontally aligned: the maximum longitudinal deviation is 0.3 mm per 1 m; the maximum transverse deviation is 0.5 mm per 1 m.

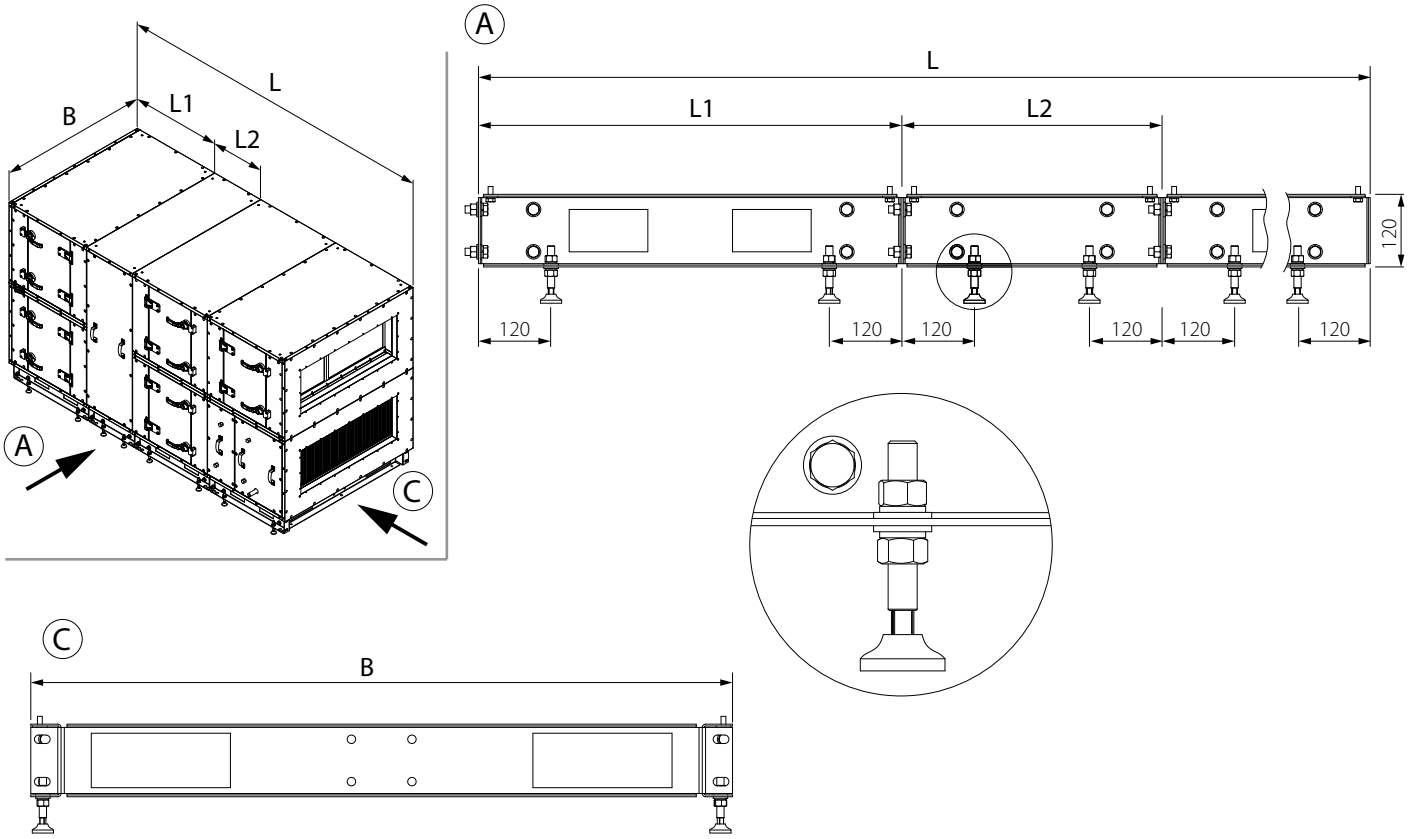

Base frame of the unit on adjustable legs

Dimensions L (length) and B (width) are specified in the unit's technical data section.

SPACE FOR MAINTENANCE

The ventilation units can be mounted indoors or outdoors depending on their types.
When selecting the installation location, free access must be ensured for maintenance or repair according to security requirements.
The unit must be mounted in such a way that enables its partial or complete dismantling and easy removal of its components if necessary (e.g. if repairing is complicated).

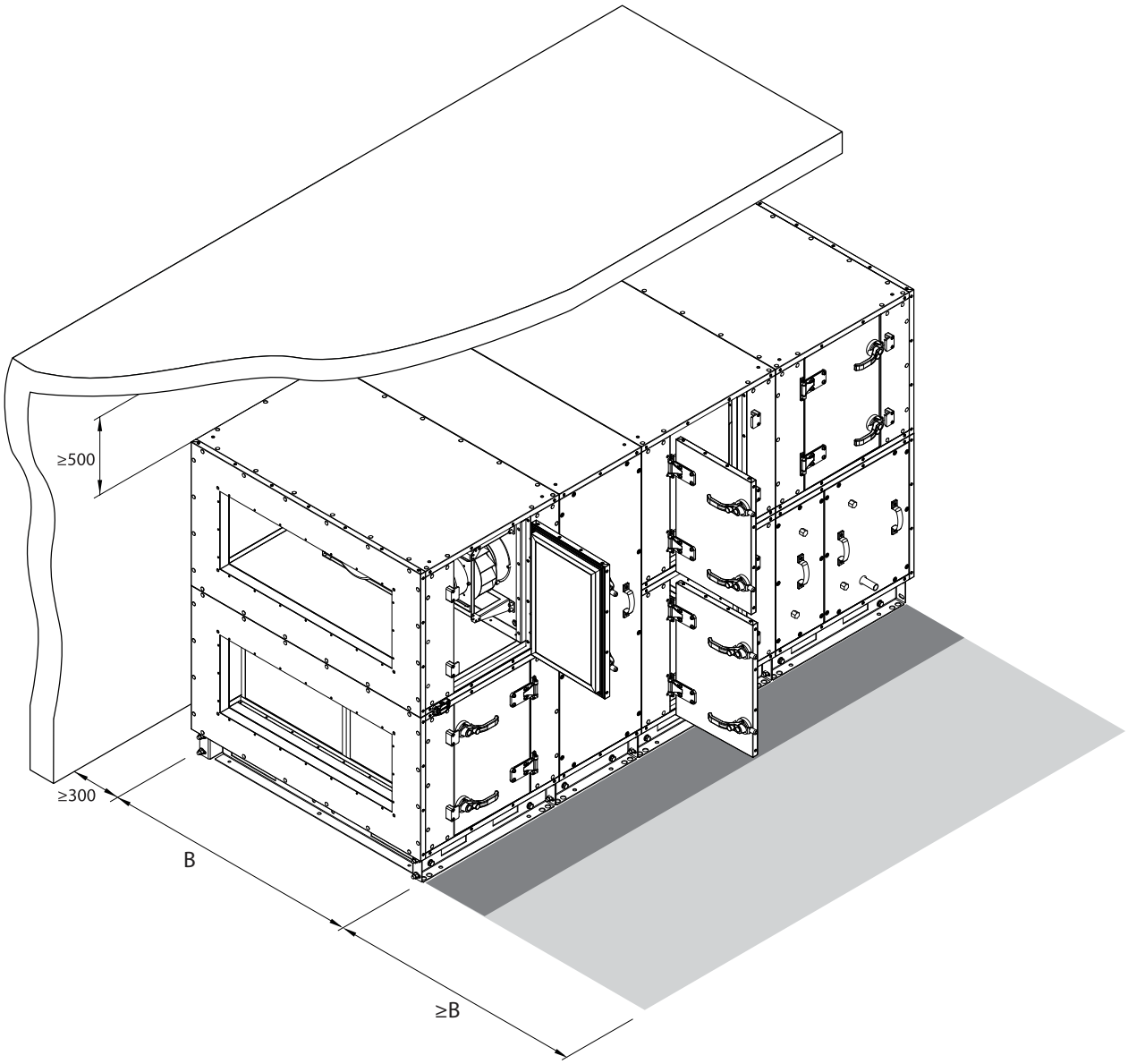

Free space in front of the unit must be ensured (at least as long as width B of the unit) to enable its maintenance, repair or component replacement (e.g. replacing filters, removing rotary heat exchangers etc.).

Width B is specified in the unit's technical data section.

CONNECTING SECTIONS

Connect all the cables leading to sections of the unit prior to attaching sections themselves.
If, for some reason, the unit sections were disassembled while installing in the operational location, the unit's airtightness may not correspond to the data specified in the documents (unless the unit was assembled by the manufacturer's qualified professional).

- Sealant (included in the delivery set) must be applied to gaps in between the sections
- In case of outdoor installation, the gaps in between the sections must be reinforced with silicone or another layer of sealant.
- Do not screw in screws or drill through the casing of the unit (unless intended by design) to avoid damaging cables and tubes inside.
- Prior to connecting all sections, check and adjust the rotor's wheel position relative to the casing if necessary.

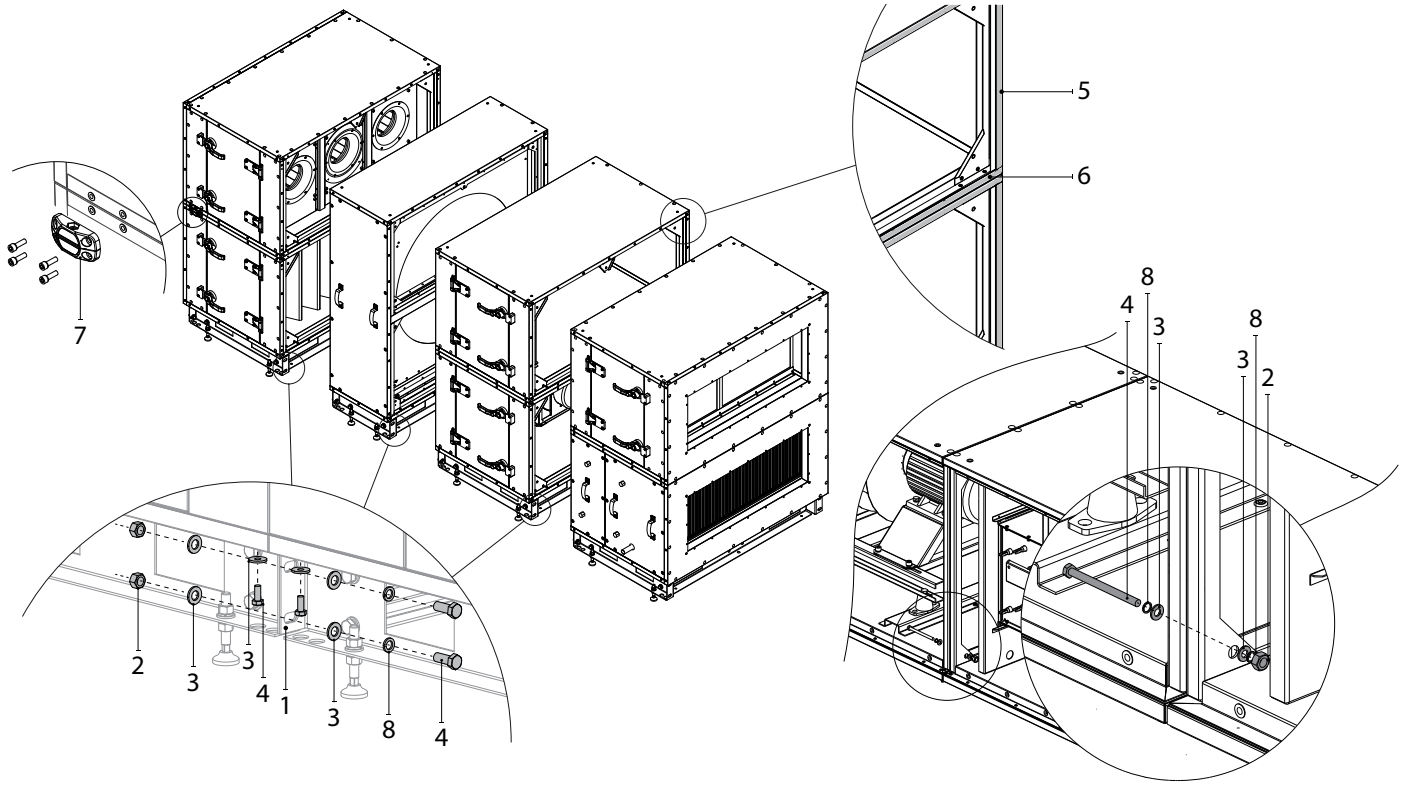

External connection and section sealing

1 — base frame; 2 — M10 nut; 3 — washer; 4 — M10 screw; 5 — weatherstripping;
6 — weatherstripping on the bar separating air flows; 7 — latch-action toggle clamp; 8 — spring washer

Individual sections may be attached to each other using external connectors or internal L-shaped corners using screws and / or spacers depending on unit size or the section's purpose.
When installing one section on top of another, connect them using latch-action toggle clamps.
Attach weatherstripping (included in the delivery set) over the connection gaps prior to toggling the clamps.
Attach weatherstripping along all the section perimeter, as well as on the bar separating the air flows.
The section screws must be tightened well enough to press on the weatherstrip, leaving at most 2-3 mm distance in between sections.
If the base frame is to be delivered along with the unit, sections are reinforced with screws through the specially designed holes in the frame (first, tighten the screws by screwing them in internal section connections before toggling the clamp attaching the mounting frame).

DOOR HANDLES



Open the door by turning the handle

PREHEATER INSTALLATION

Depending on the configuration, BLS ventilation units may include different types of preheaters: water and electric heaters.
Usually, heat exchangers are installed in separate sections along with preliminary filters, which are connected on the air intake side of the unit.
If the ventilation unit is equipped with a rotary heat exchanger, the heat exchanger sections must be installed on the base frame and connected through the bottom part of the unit.
If the ventilation unit is equipped with a plate heat exchanger, the heat exchanger sections must be installed in the upper part of the unit and must be reinforced or suspended (suspension / fastening accessories are not included in the delivery set)
The heat exchanger sections are attached to the ventilation unit and their airtightness is ensured in a similar manner as other sections (see "Connecting sections").

Units with rotary heat exchanger

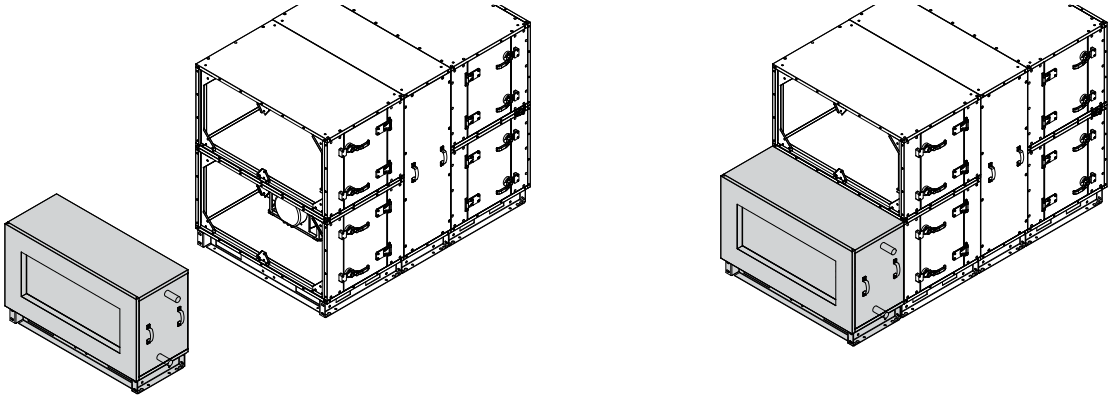

Units with plate heat exchanger

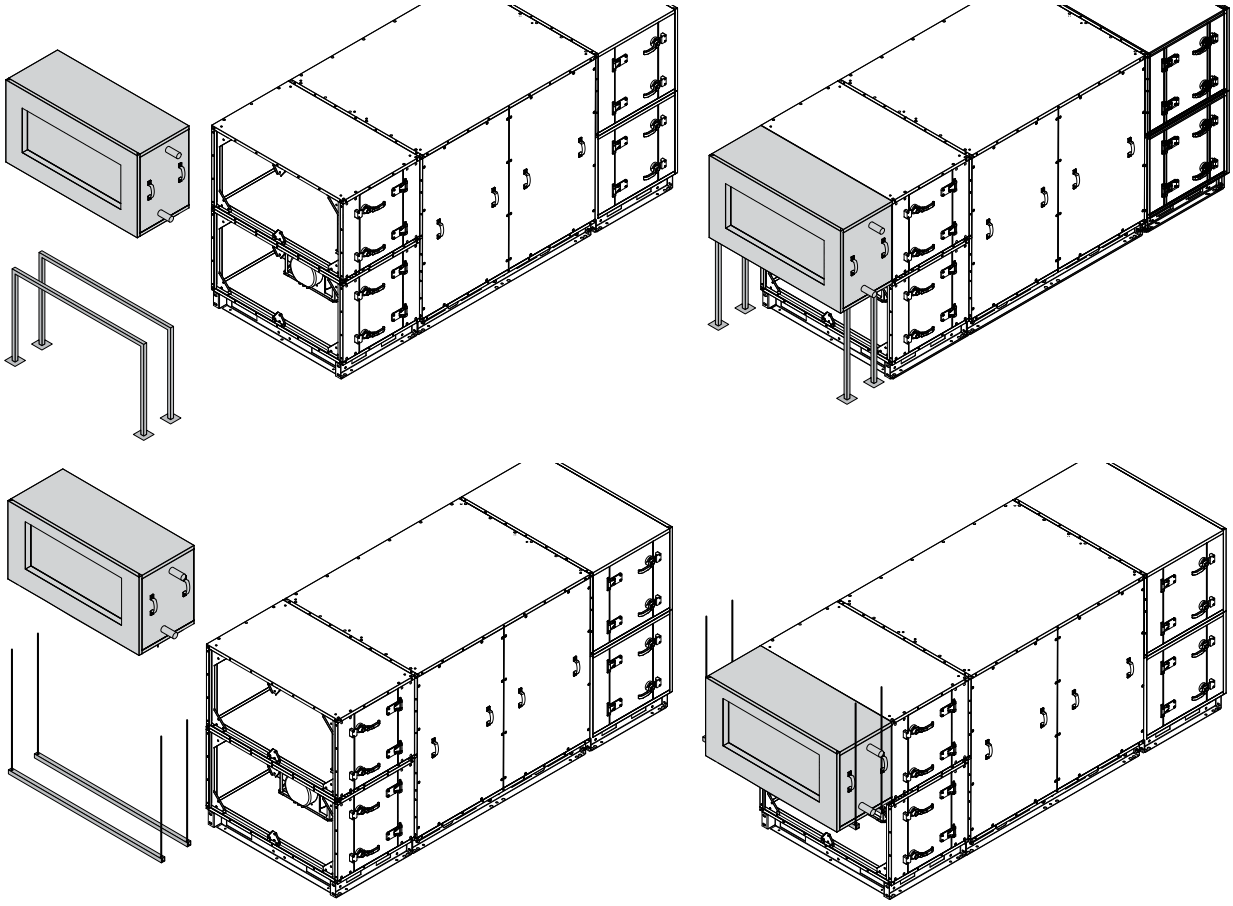

Preheater section installation examples.

CONNECTING THE HEATER AND COOLER SECTIONS

All hydraulic system mounting operations, as well as connection to power mains must be performed by qualified personnel only. The circulation pump must be grounded. Avoid contact between the power cable and the pipes or pump. The flow direction of heat transfer and cooling media must be opposite to that of air flow.

ATTENTION! When connecting a water heater and / or a water or freon cooler, the minimum length of straight piping sections must be 400 mm out of the unit (see the figure below). Otherwise it will not be possible to open service panels!

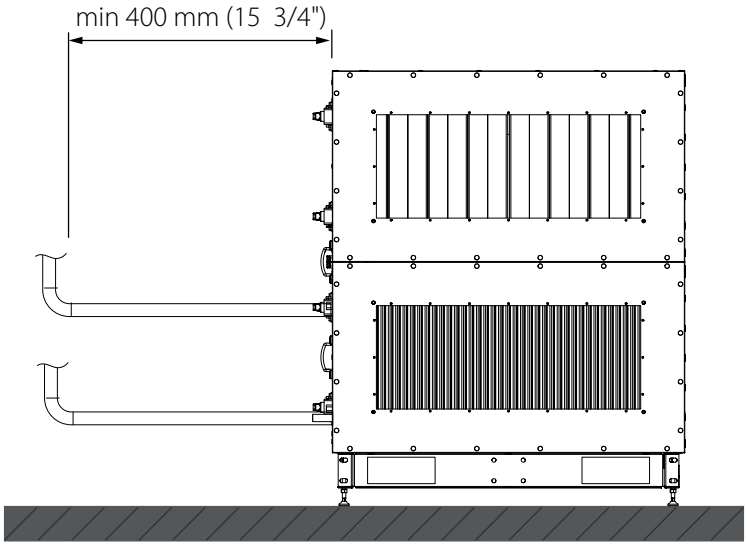

Do not apply mechanical pressure (force) to the pipes while connecting the heater and cooler! The maximum pressure of the heat transfer medium must not exceed 1.5 MPa. It is recommended to use ball valves designed to cut the flow of the heat transfer medium of the water heater (cooler) in case of emergency dismantling without releasing the heat transfer medium from the equipment.

If water is used during the heater's operation, frost protection must be ensured by installing a temperature sensor, which is secured on the back flow pipe, as closely to the heater as possible.
When attaching the sensor, make sure its metal part is tightly secured on the pipe's surface.
The sensor must be thermally insulated to prevent the indoor temperature from distorting the water temperature indication.

Connection diagram to municipal water mains

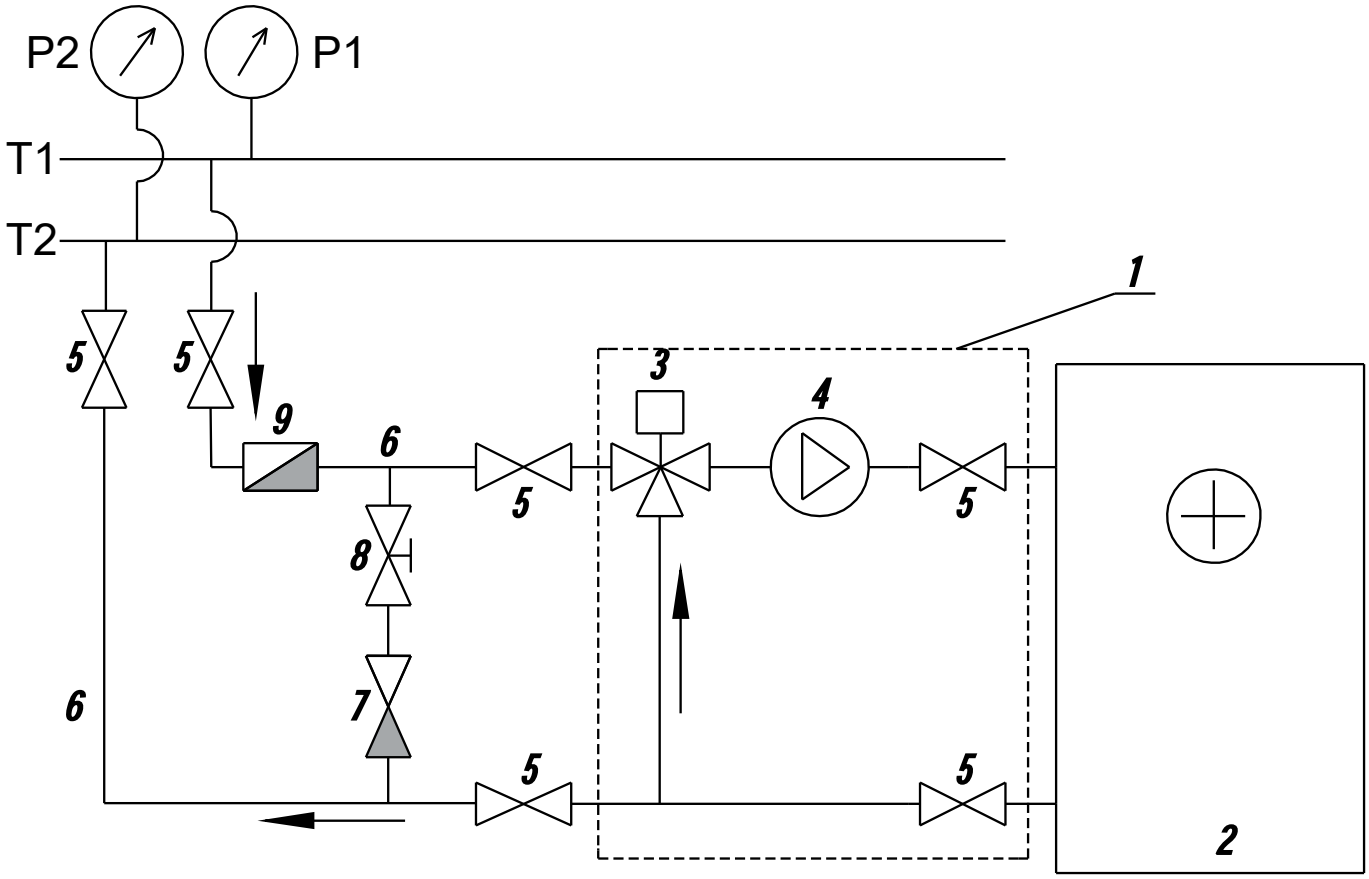

T1 and T2 - supply and return pipelines of heating/cooling system
P1 and P2 - liquid pressure gages in the heat distribution system
1 - USWK mixing unit
2 - water heater
3 - three-way valve with actuator
4 - circulation pump
5 - shut-off valve
6 - supply and return pipeline connection between heating system and water heater
7 - non-return valve
8 - balancing valve
9 - coarse filter

CONNECTING THE DRAIN PIPE

Condensate drainage

The components of the unit that have a condensate drain must be equipped with a trap to ensure that the casing is watertight and that water can be drained out uninterrupted through the drainage spigot on both the suction and discharge sides.

Recommendations for organizing condensate drainage are given below.
All components of the system are not included in the delivery set of the unit and must be purchased separately.
The manufacturer of the ventilation system is not liable for the operability of the condensate drainage system installed at a particular facility.

When installing the units on the floor, allow sufficient distance from the floor to the bottom of the unit to fit the entire condensate drainage system.

A trap must be provided at each drainage spigot, separating it from the drainage pipe. Multiple outlets must not be connected to a common trap.

The drainage pipes must have a downward slope of at least 3°, without any tapering or loops, so as not to obstruct the water flow.

Due to the positive or negative air pressure inside the air handling unit, water cannot drain out of the condensate drip tray by itself. Therefore, it is necessary to connect a trap of a suitable height or a trap with a one-way valve to the drainage pipe. The trap must have a water level that is high enough to counteract the pressure drop between the internal and external space.

The height of the trap is selected based on the static pressure inside the air handling unit (the static pressure is specified in the technical data sheet for the unit).

- only use the positive value for calculations;
- take into account the final pressure drop (filter, etc.).

For a trap wit no one-way valve, the height **H** is determined by the static pressure **p** using the formula:
H [mm] = 25 + **p,** if the pressure is expressed in mm of the water level.
H [mm] = 25 + 0.1**p** if the pressure is expressed in Pa.

The figures below illustrate the geometric features of the traps.

The suction side. Negative pressure ($\mathbf{p < p_{atmospheric}}$)

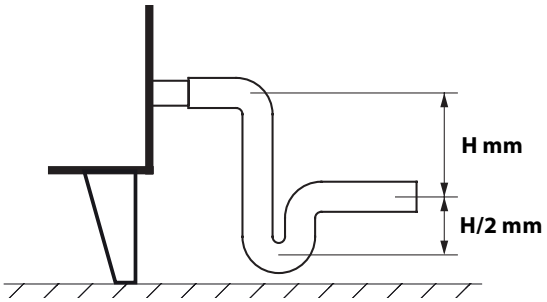

The discharge side. Positive pressure ($\mathbf{p > p_{atmospheric}}$)

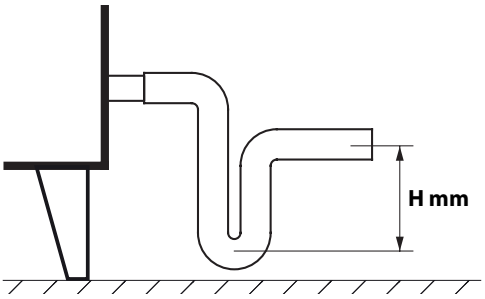

If the trap is equipped with a one-way valve, the height can be reduced, but this depends on the technical data of the trap. It is recommended to choose the height similarly to the trap without a one-way valve.

The figure below illustrates a schematic example of a trap with a one-way valve.

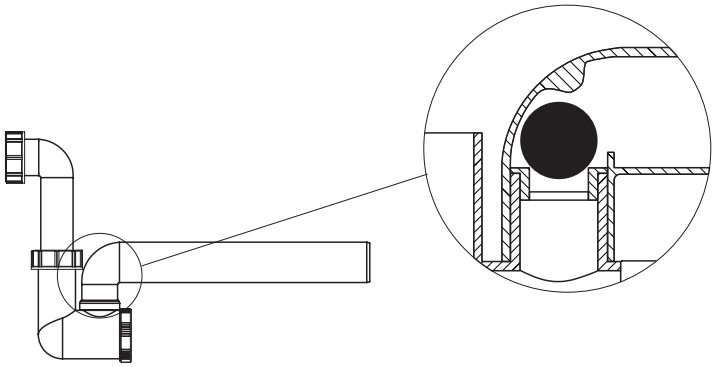

Fill up the U-traps with water before using the system.
The trap must be filled with water at all times as long as the system is operating.

The condensate drainage system should not be directly connected to the common sewage system to avoid polluting the air with bacteria and odors.

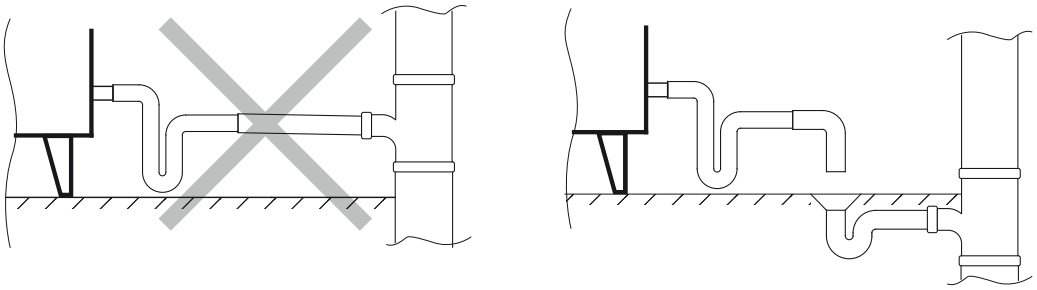

To prevent the water from freezing over in winter, the pipeline laid outdoors or in unheated rooms must be equipped with heat insulation and pre-heating.

OUTDOOR UNITS

Ventilation units of BLS, series that are planned for outdoor mounting must be reinforced to ensure protection from exposure to environmental conditions by mounting a special roof and covers for supply and extract air flows.
The units must be installed on the base frame, which is attached to the base, on which the unit is placed.
It is recommended to install outdoor units next to walls, if possible, for additional protection against wind.
The units installed outdoors that have drain pipes connected must be reinforced with frost protection, e.g. by routing cables for pipe heating.
Each section of the unit will be provided with a roof if was specified to be designed for outdoor mounting when the order was formed.
If the roof was ordered separately, it will only be installed upon full assembly of the unit.
Connections of outdoor unit designs must be additionally processed with a sealant (not included in the delivery set).
If downtime is expected when operating the outdoor unit in cold weather conditions, additional air dampers must be installed in supply and extract air ducts (from the room) to prevent air flow.
Those must prevent warm extract air from circulating in the unit during downtime to avoid condensation, which is harmful for electric components.

In outdoor units that are delivered in sections, the roof is installed upon connecting all sections only. All the connection seams of the roof must be sealed from the inside. To ensure airtightness of the joints, apply sealant on the screws before screwing them in.

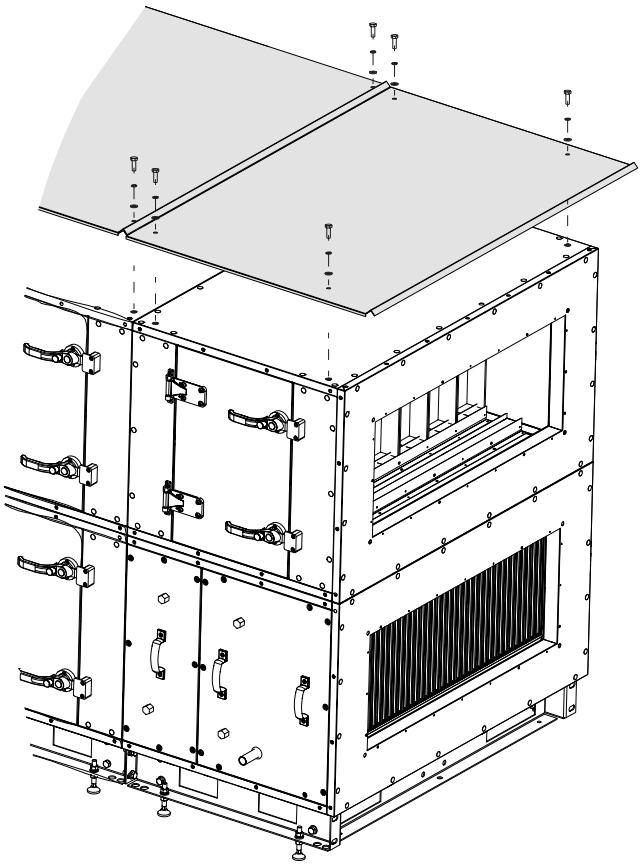

Roof installation[1]

[1] Sizes and number of accessories may vary depending on the unit type or project requirements.

Connecting air ducts, protective hoods and inline parts to the unit
Elastic ant-vibration connectors, which are designed to prevent vibration transfer from the unit to air ducts, must be used to connect air ducts to the units. Anti-vibration connectors are also designed to eliminate potential installation flaws during the process of connecting air ducts to the unit. Screws are used to attach connectors to air ducts. The equipment and air ducts that are to be connected must have their own mounting bracket in order to prevent transferring their own weight loads to the unit.

AUTOMATION

Automation included in the delivery set is an inseparable part of each ventilation and air conditioning unit, which enables the possibility of smooth control and long and trouble-free operation, preventing operation faults and severe alarms.
This document does not contain any instructions related to installing automation elements, connection, running and operating the system.
Such instructions are given by the manufacturer as part of the auxiliary documentation for the automation system.
In all other cases, the automation supplier shall provide any necessary information.
In addition to the automation unit, other elements may be included: air damper actuators, frequency converters, pressure, temperature, humidity, CO_2 and air flow sensors, humidifiers and triac controllers.
User manuals for these accessories are not provided with this document.

STARTING SETUP

A trial run must be performed before running and constant operation of the unit.
Remember, that only qualified and trained personnel can run the unit.
Read the instructions and diagrams provided in the unit-related documentation and do the following steps before the trial run:

- ensure proper installation of the unit;
- ensure proper connection of all ventilation devices to the power mains;
- ensure proper connection of all hydraulic and electric equipment to the corresponding unit sections.

Electric equipment
Ensure proper connection, insulation and grounding of electric equipment according to the wiring diagrams and technical specifications of the delivered units. Check if insulation is intact on the wiring and the units. Installation works must comply with the conditions specified in the unit's technical documents. Failure to comply voids the manufacturer's warranty. If installation works were performed by the manufacturer's personnel, then the warranty for electric equipment corresponds to the unit's warranty.
Electric heaters
Ensure that the heater is not clogged or damaged. Connect it in accordance with the wiring diagram. The connected heater should not touch any other elements of the unit.
Water heaters
Ensure that the pipelines (supply / back flow) are connected correctly; then check the heater plates. Adjust the frost protection thermostat's parameters one by one (factory settings: +5°C), as well as tight connection of the capillary tube to the heater's surface. The valve controlling the heater's operation must be installed in accordance with the marks on the casing.
Freon, water and glycol coolers.
Check the plates of the cooler, ensure correct connection of the supply and back flow pipelines. Ensure connect installation of the U-trap and droplet separator relative to the air flow direction.
Filters
Ensure proper and tight fixation of filters and their general condition. Detailed filter data should be clarified in their corresponding documentation.
Cross-flow (plate) heat exchanger
Ensure that the heat exchanger is free of clogging and mechanical damage. Ensure that the droplet separator is fixed correctly (if applicable) relative to the air flow direction. Ensure correct installation of the U-trap. If the unit is equipped with a bypass, check the condition of shutters, air dampers and fixation of wiring.
Rotary heat exchanger:
Ensure that the cells of the heat exchanger are not clogged or damaged. Check and, if necessary, tighten the spring holding the belt at the base of the motor. Check the fixation of the control unit (if applicable).
Fan section
The fan section's condition must be checked before running the unit. Ensure absence of any foreign objects in the section, e.g. transport fastening safety elements (yellow) and installation items, which may damage the unit. Unobstructed rotation of the impeller must be ensured

Then, ensure that:

- the wiring complies with the wiring diagram;
- the fan's motor is connected correctly (the power mains voltage must be equal to the one specified on the motor);
- the grounding cable is correctly connected, if the fan is installed on rubber shock absorbers;
- the shock absorbers in the fan section are installed correctly.
- all wires in the fan section are attached correctly.

If all the aforementioned procedures have been carried out, all panels of the unit may be closed.

TRIAL RUN

Only the accordingly trained and qualified personnel is authorized to carry out preparation, as well as the trial run of the unit. Proper functioning of the air dampers must be ensured before running the fans. Correct and safe operation of the unit can only be guaranteed when connected to the rated power mains. The unit must operate for ca. 30 minutes after starting. Meanwhile, check the amperage of the electric equipment and the unit's air flow. Successful operation is characterized by absence of loud noise, foreign mechanical sounds, as well as vibrations in the unit while operating. Otherwise, troubleshooting must be carried out. If the aforementioned occurs, disconnect the unit from the power mains and check each of its sections again. After turning off the unit and before opening the panels, make sure that the impeller stopped. If it cannot be determined visually, panels should be opened no sooner than 3 minutes after disconnecting the unit from power mains. If no faults were noticed after 30 minutes of operation, the unit may be turned off and checked.

Check the following elements:
- filter fasteners;
- condensate drainage efficiency;
- the motor temperature and the fan group bearings.

After ensuring correct connections, correct operation of shock-vibration dampers must be ensured. Check the frost protection thermostat's operation if weather conditions allow it. It can be done if the supply air temperature remains below the value set on the thermostat. In this case, close the heat transfer medium supply to the heater temporarily at the supply air temperature of +1...2 °C. If the thermostat is turned on, it indicates correct operation. If the trial run is carried out in the warm season, it should be checked the following cold season as soon as possible.

TECHNICAL MAINTENANCE

Air handling units are rated for continuous operation.
For proper function of the unit, maintenance must be carried out regularly.
Special attention must be paid to the elements that wear down faster: filters and bearings.
Filter replacement and cleaning are not subject to manufacturer's warranty service.
The main technical data, which are necessary for the regular maintenance, are specified in the technical data sheet, which is delivered with each device.
It contains the layout and dimensions of the core elements (filters, heat exchangers, fans, electric motors).

Filters
Air conditioning units are equipped with two types of filters: bag type and cassette type filters.
The combination and positions of the filters may vary depending on the functional delivery set of the unit.
When replacing filters, it is important that new filters of identical filtration class are installed.
If the filter is clogged, its capacity decreases, leading to lower air flow of the unit.
If the filter pressure drop exceeds the rated value, it must be replaced.
Clogged filters lead to lower air flow in the units and, eventually, to filter deformation or even fan damage.
Disconnect the unit from power mains before replacing the filters.
Replacement frequency of the primary filters is mostly dependent on air pollution levels.
Correct use of the primary filters also extends the service life of the secondary ones.

Electric terminals
Electric terminals of all electric nodes of the unit requires regular check-up and tightening to avoid contact burns and equipment malfunction.

Water heater
The water heater is by default equipped with a thermostat for frost protection.
When stopping the heat transferring medium supply, operation break (downtime), outdoor air temperature drop lower than + 4 °C, the heat transferring medium must be removed from the heater (unless the heat transferring medium is a glycol substance).
If the heater surface is clogged, the heater capacity decreases.
The cleanness of heater plates needs to be monitored.
If the heater plates are dusty, it can also increase its air resistance.
Air heaters can be cleaned with a vacuum cleaner from the supply air side blowing it with a flow of air, or washing it with a mixture of warm water and non-aggressive detergents that do not cause corrosion of aluminum plates.

Electric heater
The electric heater consists of open coils, on which dust can accumulate during downtime.
If turned on, heavy dust can cause fire or the odor of burning dust to occur.
The technical condition, wiring, and cleanness of the heaters must be checked regularly.
Dry cleaning only.

Water cooler

Cooler maintenance procedures are identical to those of heater maintenance.

It is necessary to ensure that the cooler and droplet separator are clean, and the condensate drainage spigot is unobstructed.

If the cooling tubes are dirty (clogged), wash them with a mixture of warm water and a non-aggressive detergent.

Freon cooler

Operational and maintenance conditions for freon coolers are identical to those of the water heater and cooler.

Before washing the freon cooler with warm water, disconnect the unit from the power mains.

Otherwise, an uncontrolled freon pressure increase and cooling equipment damage can occur.

Cross-flow heat exchanger

Heat exchanger maintenance includes checking the cleanness of plates and its technical condition.

The cross-flow heat exchanger must be cleaned with a vacuum cleaner by blowing air flow on it, or washing air ducts with a mixture of water and a non-aggressive detergent that does not cause aluminum corrosion.

Check the condition of the droplet separator (if available), condensate drain pan and the condensate drainage system.

If the heat exchanger is equipped with a bypass and air damper, visually check the condition of the bypass actuator and ensure unobstructed air damper lamina movement.

Rotary heat exchanger:

When performing the rotary heat exchanger maintenance, check the cells of the unit.

Those surfaces must be free of dirt or mechanical damage.

Ensure that the belt is tight enough. Its tightness is controlled with a spring at the base of the motor.

Check the fixation of the control unit (if applicable).

The rotary heat exchanger must be cleaned with a vacuum cleaner by blowing air flow on it, or washing air ducts with a mixture of water and a non-aggressive detergent that does not cause aluminum corrosion.

Air valve and damper

Air dampers must be checked regularly.

Proper function of air dampers can be obstructed by dust, fat and other pollutants, which can accumulate on the lamina and cogs of the dampers.

If dirt is detected, remove it with compressed air.

If the aforementioned troubleshooting is ineffective, clean the damper with a strong stream of a mixture of water and a non-aggressive detergent, which does not cause corrosion on aluminum surface.

PROCEDURES FOR TECHNICAL MAINTENANCE OF VENTILATION EQUIPMENT

	Component name	once per week	once per month	once in 6 months	once per year
1.	**Supply air filter*:**				
	- visual inspection	-	+	-	-
	- dusting, blowing with compressed air	-	(!)	+	-
	- replacement	-	-	-	+
2.	**Extract air filter*:**				
	- visual inspection	-	+	-	-
	- dusting, blowing with compressed air	-	(!)	+	-
	- replacement	-	-	-	+
3.	**Automation panel:**				
	- checking communication and power cords for integrity	-	+	-	-
	- checking terminal connections	-	+	-	-
	- checking fail-start protection equipment	-	+	-	-
	- checking controller operation, analyzing error log	+	-	-	-
	- analyzing temperature sensor values	+	-	-	-
	- verification of the preset parameters of frequency converters	-	-	-	+
	- checking temperature sensor values	+	-	-	-
	- operation checking of the frequency converter of the rotor drive	-	-	-	+
	- checking the operation of the protective nodes	-	+	-	-
4.	**Water heater:**				
	- visual condition check-up	-	-	+	-
	- cleaning and washing	-	-	-	+
	- checking the operation of the three-way valve and circulating pump (if there is heat transferring medium in the system)	-	-	+	-

PROCEDURES FOR TECHNICAL MAINTENANCE OF VENTILATION EQUIPMENT

	Component name	once per week	once per month	once in 6 months	once per year
5.	**Electric heater:**				
	- visual condition check-up	-	+	-	-
	- cleaning	-	-	+	-
	- checking the heating elements	-	-	+	-
6.	**Water cooler:**				
	- visual condition check-up	-	+	-	-
	- cleaning (including the droplet separator)	-	-	-	+
7.	**Freon cooler:**				
	- visual condition check-up	-	+	-	-
	- cleaning (including the droplet separator)	-	-	-	+
8.	**Cross-flow heat exchanger:**				
	- visual inspection	-	+	-	-
	- checking the condensate drain pan	-	+	-	-
	- checking the drainage system and U-trap	-	+	-	-
	- checking the bypass air damper and its actuator	-	+	-	-
	- cleaning the heat exchanger	-		-	+
9.	**Rotary heat exchanger:**				
	- ensuring smooth rotation	-	+	-	-
	- checking the belt condition and tightness	-	+	-	-
10	**Shutter valve (extract / supply):**				
	- checking air shutters for smooth operation	-	-	+	-
	- ensuring actuator triggering and checking the wiring condition	-	-	+	-
	- cleaning the valve	-	-	+	-
11.	**Back shutter valve:**				
	- checking air shutters for smooth operation	-	-	+	-
	- checking of the electric actuator and electric connections	-	-	+	-
	- damper cleaning	-	-	+	-
12.	**Supply and extract fans:**				
	- visual inspection and check-up of the electric motors and impellers	-	+	-	-
	- check-up of the motor fixation and vibration dampers on the mounting frame in the fan unit	-	+	-	-
	- check-up of the terminal connections in the motor terminal box	-	-	+	-
	- test run of the motor with and without load	-	-	+	-
	- checking of the impeller fixation to the motor shaft	-	+	-	-
	- checking of the indirect motor heating temperature under the rated operation conditions	-	-	+	-
	- current checking and measuring for each phase	-	-	-	+
	- verification of the frequency converter parameters	-	-	-	+
	- dusting the impeller and motor	-	-	+	+

(!) — more intensive contamination requires more frequent applications.
*— filter cleaning and replacement frequency may vary depending on the region and air pollution degree.

ALARMS

	Alarm	Alarm source	Possible troubles
1.	Fire signalling	External signal from the fire alarm system. The inputs of the external terminals are closed and the alarm signal is generated.	Check the inlet circuits.
2.	Supply fan	Operation signal from the supply fan frequency converter.	Check the frequency converter settings. Check the parameters of the controller inputs. These parameters must be consistent with the frequency converter parameters.
		Fan pressostat.	Check the fan operation. Check the pressostat operation. Check the thermostat capillary tube mounting.
3.	Extract fan	Operating signal of the extract fan frequency converter.	Check the frequency converter settings. Check the parameters of the controller inputs. These parameters must be consistent with the frequency converter parameters.
4.	Temperature sensor	Malfunction of any temperature sensor	Check the current temperature readings in the controller menu, see Current status. If the controller reads the temperature -40 °C, it indicates a short circuit in the corresponding sensor circuit. If the controller reads the temperature +150 °C, it indicates a circuit breakdown.
5.	Heat exchanger freezing	This alarm is generated if the temperature falls down below the set point within a set time period.	Check the parameters of the control low for the heat exchanger.
			Operation signal from the rotary heat exchanger frequency converter.
			Check the exhaust air temperature for functionality.
6.	Rotary heat exchanger	Operation signal from the rotary heat exchanger frequency converter.	Check the frequency converter settings. Check the parameters of the controller inputs. These parameters must be consistent with the frequency converter parameters.
7.	Heater freezing	Triggering of the frost protection thermostat of the heater. The frost protection function remains active in the summer mode.	Set the thermostat tripping temperature from 8 to 10 °C. Check the thermostat control circuit. Check the settings of the operating contact for compliance.
8.	Low water temperature	Low heat medium temperature at the end of the heating cycle.	Check the heat medium. Check the pump. Check operation of the actuating device. Check heat medium flow. Check the heat medium temperature.
9.	Low return heat medium temperature	Low heat medium temperature during operation.	Check the heat medium temperature. Check operation of the circulation pump. Check operation of the actuating device. Check heat medium flow and make sure the hydraulic system is not clogged.
10.	Circulation pump	No pump operation control.	Check the pump functionality. Check functionality of the control unit (pressostat, flow rate sensor, etc.). If a control unit is not available, jump the respective inputs.
11.	Supply filter	Supply filter clogging.	Check for clogging. Check the clogging control device (pressostat).
12.	Extract filter	Extract filter clogging.	Check for clogging. Check the clogging control device (pressostat).
13.	Heater overheating	Triggering of the overheating thermostat.	Check the supply air damper for opening, check the supply filter for clogging, check functionality of the actuating device (relay).
14.	Low supply air temperature	Low supply air temperature within 10 minutes (scheduled) is interpreted as underheating.	Check the heating element and control circuit condition. Make sure that the environmental conditions of the installation place match the stated conditions.

TROUBLESHOOTING

	Problem	Possible source	Troubleshooting
1.	Filter alarm (clogging).	Filter clogging.	Clean the filter using a vacuum cleaner against air flow direction or install a new filter. (!) Do not wash the filter with water or detergents!
		Malfunction of the pressostat or breakdown of the commutation circuit (NC - normally closed contact).	Check the status of the pressostat or check its circuit (NC - normally closed contact).
2.	Low air flow.	Filter clogging, heater or heat exchanger contamination.	Clean the fan, the heater and the heat exchanger.
		Fan malfunction.	Check power supply to the fan. Check the control system for errors.
		One or two both dampers are closed.	Check the air damper for smooth opening. Check connection to power supply and available control signal on the damper actuator.
		Wrong rotation direction of the fan.	Check the three-phase motor for correct phase sequence. Check the capacitor capacity and its status for the single-phase motor. Check the software settings and rotation direction. **(!) The rotation direction is shown on the impeller of the ventilation unit or in the corresponding user manual.**
3.	Water dripping in the unit.	Drain line clogging.	Clean the pipes.
		No U-trap.	Install the U-trap.
		Wrong unit / drain line mounting angle.	Check the installation angle of the air handling unit/drain line for consistence with the data stated in the technical documentation. Ensure compliance if required.
4.	No heating (applicable for the air handling units with an integrated heater)	No power supply to the electric heating elements.	Check power supply to the heater section. Check resistance of each heating element and check them for integrity. In case of any breach on the circuit of the heating element replace it.
		Tripping of the thermal switch TK 90 °C.	Press the "Reset" button on the thermal switch TK90 for manual reset. (!) Troubleshoot the tripping source for TK90.
		No contact on the electric heating elements.	Press the connection lugs of the heating elements.
		Breaking of the electric heater element (wire breaking)	Replace the electric heating element.
		Breakdown of the solid-state relay.	Check the condition of the solid-state relay using a volt-ohm meter. Normally, the relay does not act as a conductor and is closed.
5.	Water heater/cooler has insufficient heating or cooling capacity.	No heat medium.	Check availability of the heat medium in the hydraulic system, its temperature and pressure.
		Air locks in the hydraulic system.	Deaerate the system.
		No heat medium circulation.	Check power supply to the circulation pump.
			Check the pump rotor for rotation.
		Malfunction or closing of the mixing unit.	Check power supply to the mixing unit actuator.
			Check the connection of the actuator to the actuating device.
		Open bypass damper.	Check the bypass damper actuator for jamming. Make sure it is properly connected to power supply. Ensure that the bypass damper opening procedure matches the control system command.

TROUBLESHOOTING

	Problem	Possible source	Troubleshooting
6.	Abnormal noise generated by the unit.	Direct connection of the air duct to the casing without anti-vibration connector.	Make sure the air duct does not touch the unit.
		Run-out of the motor bearing service life.	Check rotation of the rotor (impeller) when idle. Noise and skirr may indicate the run-out of the bearing service life. Measure the phase current and make sure it is consistent with the data specified in the manual
		Wrong rotation direction of the fan.	Check the software settings and rotation direction. (!) The rotation direction is shown on the impeller of the ventilation unit or in the corresponding user manual.
7.	Malfunction of one or both motors.	No power supply to the electric motors.	Check the voltage.
		Motor winding breakdown or turn-to-turn short circuit of the motor winding.	Check resistance of each motor winding using a volt-ohm meter.
		No control signal for EC motors.	Make sure the signal is available for specified status of the control system parameters. Check the control system for errors.
8.	Generation of condensate in inappropriate places in the unit.	Air motion inside of the unit during standstill caused by air draughts because of open dampers or no dampers.	Check functionality of the supply and exhaust air dampers.
		Internal air leakages as a result of severe clogging of one or two filters.	Clean the filter using a vacuum cleaner against air flow direction or install a new filter. (!) Do not wash the filter with water or detergents!
		Unit misuse.	Check the transported air parameters (humidity + temperature) and the environmental parameters.

FINAL MEASUREMENT OF OPERATING PARAMETERS

The technical maintenance of the unit includes routine measurements of the following parameters:

- Correct temperature and humidity of the processed air both upstream and downstream of the air handling unit.
- The operating parameters of the components in the connected heating and cooling equipment.
- Proper operation of the electrical equipment (power consumption measurements).
- Proper operation of the fan groups specific to maintaining the air flow and unit operation parameters.

All the work specific to the routine control measurements and technical maintenance operations must be confirmed with the appropriate documents.

STORAGE AND TRANSPORTATION REGULATIONS

- Store the unit in the manufacturer's original packaging box in a dry closed ventilated premise with temperature range from -20 ˚C to +30 ˚C and relative humidity up to 70 %.
- Storage environment must not contain aggressive vapors and chemical mixtures provoking corrosion, insulation, and sealing deformation.
- Use suitable hoist machinery for handling and storage operations to prevent possible damage to the unit.
- Follow the handling requirements applicable for the particular type of cargo.
- The unit can be carried in the original packaging by any mode of transport provided proper protection against precipitation and mechanical damage. The unit must be transported only in the working position.
- Avoid sharp blows, scratches, or rough handling during loading and unloading.
- Prior to the initial power-up after transportation at low temperatures, allow the unit to warm up at operating temperature for at least 3-4 hours.

Name	**Number**
Extract fan	
Supply fan	
Air filter	
Water heater	
Electric heater	
Water cooler	
DX cooler	
Plate heat exchanger	
Rotary heat exchanger	
Humidifier	
Dehumidifier	
Silencer	
Air damper	
Air damper with electric actuator	
Flexible connector	
AUTOMATION UNIT	

Sticker

CERTIFICATE OF ACCEPTANCE

Unit Type	Air handling unit
Model	
Serial Number	
Manufacture Date	
Quality Inspector's Stamp	

SELLER INFORMATION

Seller	
Address	
Phone Number	
E-mail	
Purchase Date	
This is to certify acceptance of the complete unit delivery with the user's manual. The warranty terms are acknowledged and accepted.	
Customer's Signature	

Seller's Stamp

INSTALLATION CERTIFICATE

The _____ unit is installed pursuant to the requirements stated in the present user's manual.	
Company name	
Address	
Phone Number	
Installation Technician's Full Name	
Installation Date:	**Signature:**
The unit has been installed in accordance with the provisions of all the applicable local and national construction, electrical and technical codes and standards. The unit operates normally as intended by the manufacturer.	
Signature:	

Installation Stamp

WARRANTY CARD

Unit Type	Air handling unit
Model	
Serial Number	
Manufacture Date	
Purchase Date	
Warranty Period	
Seller	

Seller's Stamp

BLAUBERG



www.blaubergventilatoren.de
B272-1EN-01