Compensating pad OCP-30 AH-11 160

Installation instruction

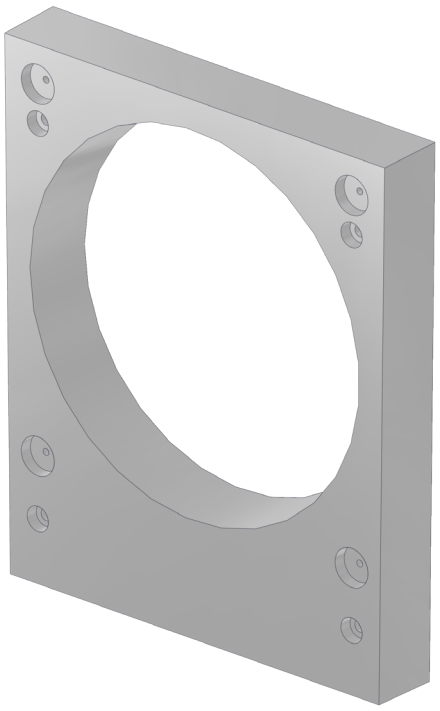

Purpose

The compensating pad is designed to be used when installing the outer ventilation hood AH-17 160.
Using one or multiple pads makes it possible to compensate for insufficient wall thickness when mounting ventilators into it.
The pads also provide proper thermal insulation for the part of the ventilator that protrudes outside the wall.

Overall dimensions [mm]

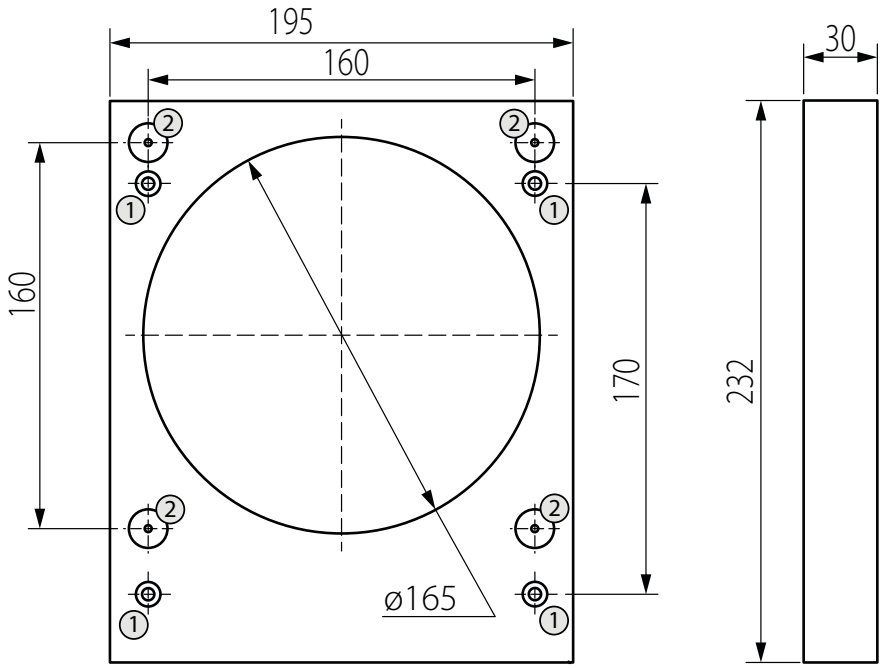

1 – holes for mounting the pad onto the wall,
2 – holes for mounting the hood over the pad.

The diagram of pads' location relative to the inner nods of the ventilator and the wall (exemplified using two pads)

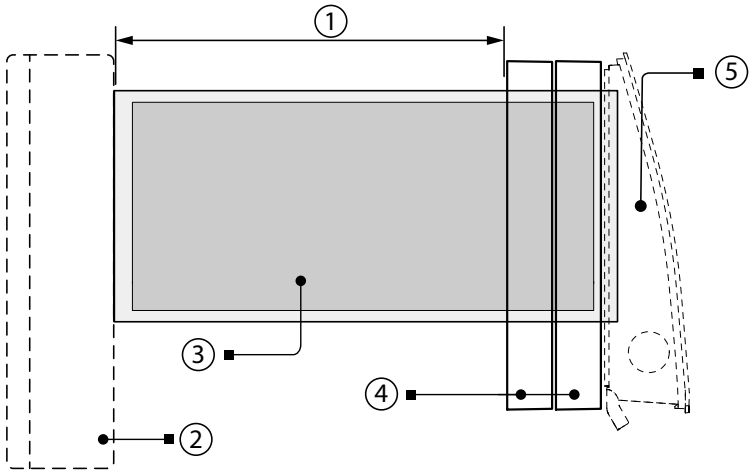

1 – wall thickness, 2 – indoor unit, 3 – cartridge, 4 – compensating pads, 5 – outer ventilation hood

Installing a compensating pad (exemplified using two pads)

The compensating pad is installed after final fixation of the ventilator according to its installation instructions.

Warning! If the unit needs to be installed at a great height, use the services of an installation company with the appropriate equipment!

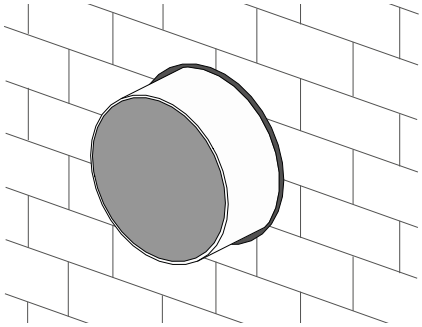

Mark the mounting holes. For comfortable installation, put one pad on the air duct and mark the wall through the corresponding holes.
Drill four 50 mm deep holes for 6x40 dowels.
Fasten the 6x40 dowels supplied with the ventilation hood.

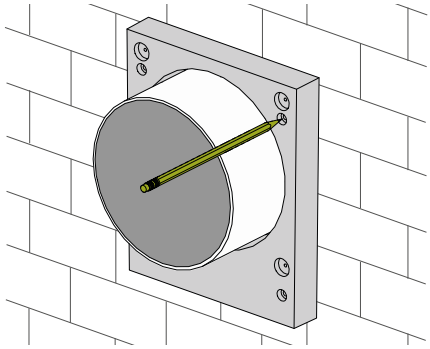

Secure both pads with self-tapping screws of appropriate size.
The number of pads necessary for the procedure is determined based on the ratio of the lengths of the inner units within the fan to the wall thickness.

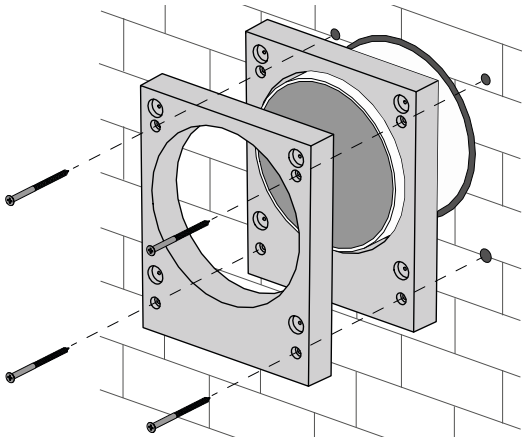

The pads can be painted with weather-resistant (facade) paint.
Install the outer ventilation hood on the pads as described in the installation instructions for the hood.

