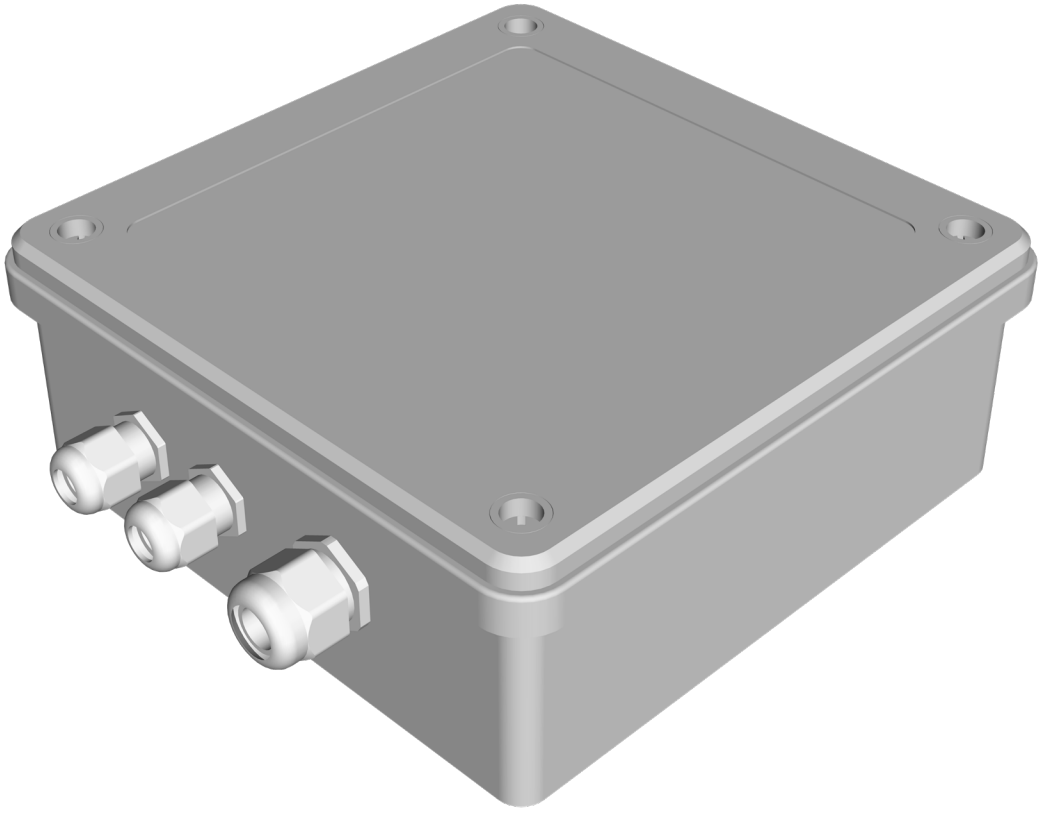

CONTROLLER FOR INTEGRATING FANS WITH EC MOTORS INTO THE BMS

BMS Module

EN *USER'S MANUAL*

BLAUBERG

CONTENTS

Safety requirements ... 2
Purpose ... 4
Delivery set ... 4
General functions ... 4
Technical data ... 5
Connection to power mains ... 6
Control ... 8
Remote control mode ... 12
Register table ... 13
Switching operating modes ... 15
Storage and transportation regulations ... 15
Manufacturer's warranty ... 16
Certificate of acceptance ... 19
Seller information ... 19
Installation certificate ... 19
Warranty card ... 19

This user's manual is a main operating document intended for technical, maintenance, and operating staff.
The manual contains information about purpose, technical details, operating principle, design, and installation of the BMS Module unit and all its modifications.
Technical and maintenance staff must have theoretical and practical training in the field of ventilation systems and should be able to work in accordance with workplace safety rules as well as construction norms and standards applicable in the territory of the country.

SAFETY REQUIREMENTS

This unit is not intended for use by persons (including children) with reduced physical, sensory or mental capabilities, or lack of experience and knowledge, unless they have been given supervision or instruction concerning use of the unit by a person responsible for their safety.
Children should be supervised to ensure that they do not play with the unit.
This appliance can be used by children aged from 8 years and above and persons with reduced physical, sensory or mental capabilities or lack of experience and knowledge if they have been given supervision or instruction concerning use of the appliance in a safe way and understand the hazards involved.
Cleaning and user maintenance shall not be done by children without supervision.
Children shall not play with the appliance.

Connection to the mains must be made through a disconnecting device, which is integrated into the fixed wiring system in accordance with the wiring rules for design of electrical units, and has a contact separation in all poles that allows for full disconnection under overvoltage category III conditions.

Ensure that the unit is switched off from the supply mains before removing the guard.

All operations described in this manual must be performed by qualified personnel only, properly trained and qualified to install, make electrical connections and maintain ventilation units.
Do not attempt to install the product, connect it to the mains, or perform maintenance yourself.
This is unsafe and impossible without special knowledge.
Disconnect the power supply prior to any operations with the unit.
All user's manual requirements as well as the provisions of all the applicable local and national construction, electrical, and technical norms and standards must be observed when installing and operating the unit.
Disconnect the unit from the power supply prior to any connection, servicing, maintenance, and repair operations.
Connection of the unit to power mains is allowed by a qualified electrician with a work permit for the electric units up to 1000 V after careful reading of the present user's manual.
Check the unit for any visible damage of the impeller, the casing, and the grille before starting installation. The casing internals must be free of any foreign objects that can damage the impeller blades.
While mounting the unit, avoid compression of the casing! Deformation of the casing may result in motor jam and excessive noise.
Misuse of the unit and any unauthorised modifications are not allowed.
Transported air must not contain any dust or other solid impurities, sticky substances, or fibrous materials.
Do not use the unit in a hazardous or explosive environment containing spirits, gasoline, insecticides, etc.
Do not close or block the intake or extract vents in order to ensure the efficient air flow.
Do not sit on the unit and do not put objects on it.
The information in this user's manual was correct at the time of the document's preparation.
The Company reserves the right to modify the technical characteristics, design, or configuration of its products at any time in order to incorporate the latest technological developments.
Never touch the unit with wet or damp hands.
Never touch the unit when barefoot.
Do not install or use the product until all construction and finishing work has been completed in the room where it is to be installed.
BEFORE INSTALLING ADDITIONAL EXTERNAL DEVICES, READ THE RELEVANT USER MANUALS.



THE PRODUCT MUST BE DISPOSED SEPARATELY AT THE END OF ITS SERVICE LIFE.

DO NOT DISPOSE THE UNIT AS UNSORTED DOMESTIC WASTE.

PURPOSE

Enables the integration of industrial fans equipped with EC motors into a Building Management System (BMS) via the Modbus protocol.
Enables motor control based on analog and discrete signals from external sensors.
Supports remote control, fault monitoring functions, and speed control.

DELIVERY SET

Name	Quantity
Controller	1 pc.
User's manual	1 pc.
Packing box	1 pc.

GENERAL FUNCTIONS

BMS Module

- Fault signal generation
- Fan speed control
- Switch to Boost Mode with adjustable speed
- Support for connection to BMS
- Support for external 0-10 V sensor
- Support for external NO/NC discrete sensor

TECHNICAL DATA

The unit is designed for use in premises with ambient temperature ranging from +1 °C up to +40 °C and relative humidity up to 80 % at +25 °C.
The unit is rated as a class I electric appliance.
The casing protection rating is IP44
The unit's mass is 0.6 kg.
The unit design is constantly being improved, thus some models may slightly differ from those described in this manual.
The figure below shows the overall and connection dimensions of the casing.

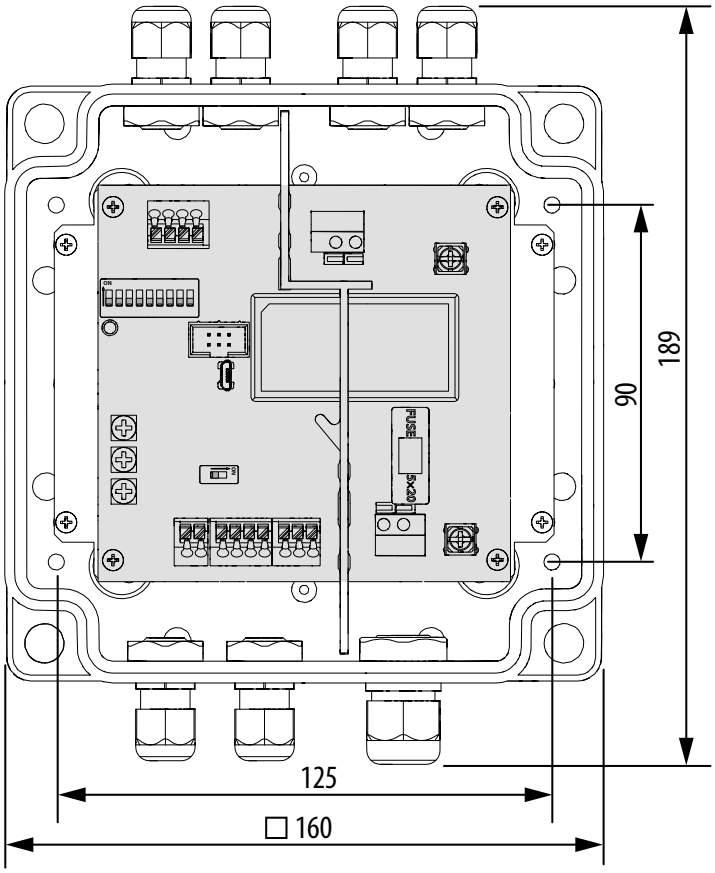

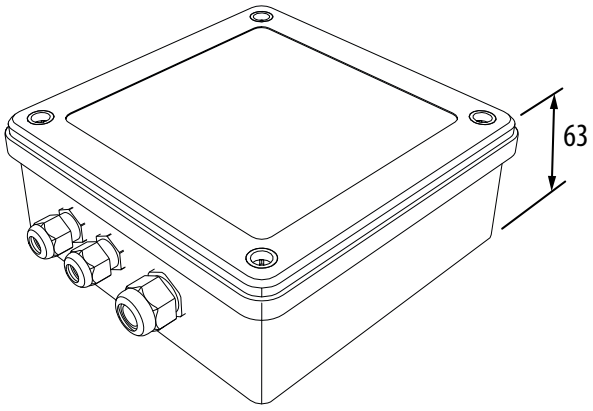

The electrical parameters of the product, excluding fan power consumption
Supply voltage – 1 ~ 230 V.
Frequency – 50 Hz.
Max. power consumption – 18 W
Max. current consumption – 0.1 A
Max. 24V sensor current – 0.3 A

CONNECTION TO POWER MAINS

DISCONNECT THE POWER SUPPLY PRIOR TO ANY OPERATIONS WITH THE UNIT.

CONNECTION OF THE UNIT TO POWER MAINS IS ALLOWED BY A QUALIFIED ELECTRICIAN WITH A WORK PERMIT FOR THE ELECTRIC UNITS UP TO 1000 V AFTER CAREFUL READING OF THE PRESENT USER'S MANUAL.

THE RATED ELECTRICAL PARAMETERS OF THE UNIT ARE GIVEN ON THE MANUFACTURER'S LABEL

ANY TAMPERING WITH THE INTERNAL CONNECTIONS IS PROHIBITED AND WILL VOID THE WARRANTY.

The figure below shows a diagram illustrating how to connect an EC motor to the power supply via a BMS controller

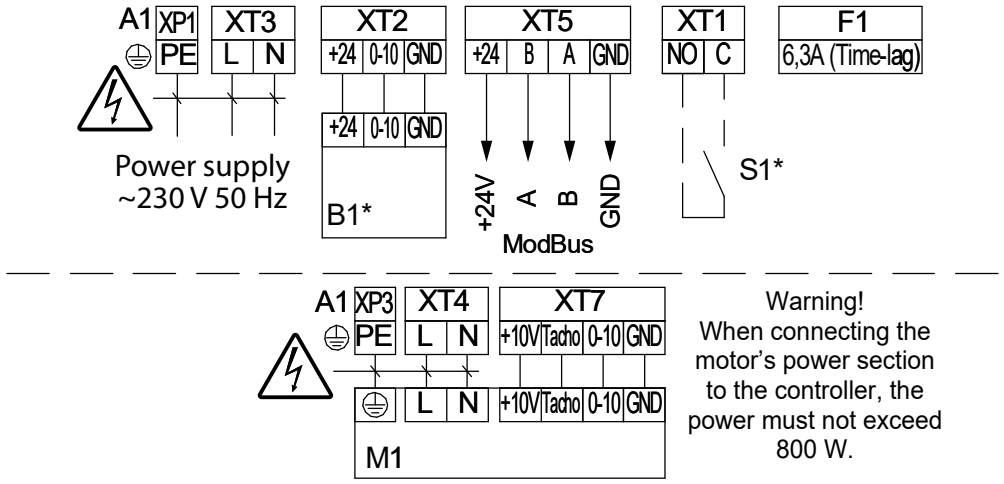

– ELECTRICAL HAZARD

Designation	Name	Wire type	Note
A1	Controller		
M1*	Motor		
S1*	NO/NC contact (configurable)	2 x 0.5 mm^2	Dry contact
B1*	0-10 V sensor	3 x 0.25 mm^2	

*Not included in the delivery set.

Component layout diagram on the controller board

BMS Module

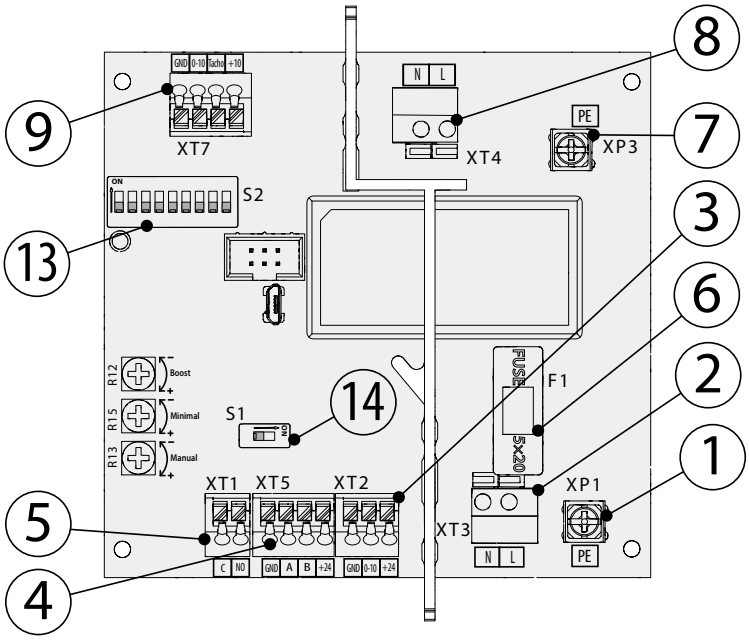

1 – XP1 ground terminal;
2 – XT3 230 V 50 Hz power input;
3 – XT2 0–10 V input;
4 – RS-485 (Modbus) XT5;
5 – XT1 NO/NC discrete sensor input;
6 – F1 fuse;
7 – XP3 ground terminal;
8 – 230 V 50 Hz power output XT4;
9 – Motor control XT7;
13 – S2 DIP switches;
14 – S1 terminating resistor

Warning. The maximum total motor power when connected via the controller board is: for the BMS Module – 800 W.
When using more powerful motors, connect the power supply bypassing the controller board.
Warning. None of the controller's interfaces have galvanic isolation.
Use only galvanically isolated motors.

CONTROL

Operating modes

The controller supports two operating modes: local and remote.
The mode is selected using DIP switch S2-8.
In both modes, communication via RS-485 (Modbus RTU) remains active. The controller operates as a Slave device and responds to requests from the Master.
It is possible to remotely read and modify registers, as well as save them to non-volatile memory. However, the values of some registers may be ignored when the controller is operating in local mode.

Local mode

The controller operates as a standalone device, controlling fan speed according to settings and sensor signals.
Configuration is performed using DIP switches (some settings are available only via Modbus and can be configured using USB-RS485 and dedicated software).
Local mode is activated if the S2-8 switch is put in the appropriate position.
If Modbus communication is lost, the controller automatically switches to local mode, and once communication is restored, it returns to the mode configured via the S2-8 DIP switch.
Some settings applicable to both modes are available for modification only in remote control mode (see the table below).

Control via Modbus RTU (remote mode)

The controller operates on a Modbus network and regulates speed based on set parameters (HREG register values) and signals from sensors.
The maximum number of devices on the network is 31.

Comparison of operating modes

Parameter name	Remote (Modbus registers)	Local (controls on the board)
BOOST threshold	HREG_AIN_BOOST_THR	Potentiometer R15
BOOST speed	HREG_BOOST_SP	Potentiometer R12
Minimum speed	HREG_SPEED_MIN	Potentiometer R13
Maximum speed	HREG_SPEED_MAX	
Motor enable	HREG_MOTOR_EN	–
Activation of 0-10V sensor input	HREG_AIN_EN	DIP switch S2-6
Activation of discrete sensor input	HREG_DI_EN	DIP switch S2-7
Active level of discrete sensor input	HREG_DI_POLARITY	
Base speed (motor speed when BOOST is inactive)	Priority: 0-10V input, if disabled then HREG_SPEED_SP	0-10V input
Feedback control	HREG_FB_TYPE	DIP switch S2-9

Configuring the controller using DIP switches and potentiometers.

S1 Terminating resistor

Enables or disables the 120-Ω terminating resistor that must be present at both ends of a long RS-485 line.

Position	Mark	Function	OFF (0)	ON (1)
1	Rt	120 Ω terminating resistor	Terminating resistor OFF	Terminating resistor ON

S2 Configurator

Configuration of the Modbus slave address, sensors, operating mode, and fault monitoring via motor feedback.

Position	Mark	Function	OFF (0)	ON (1)
1	D1	Modbus address setting	1 2 4 8 16 | | | | | D1 D2 D3 D4 D5 ON=1 OFF = 0 ADDR=SUM ADDR = (D1*1)+(D2*2)+(D3*4)+(D4*8)+(D5*16) Example: D1, D2, D4 - ON, D3, D5 - OFF (1*1)+(1*2)+(0*4)+(1*8)+(0*16) = 1+2+8=11	
2	D2			
3	D3			
4	D4			
5	D5			
6	Ai 0-10 V	Activation of 0-10V analog sensor input	Analog sensor input OFF	Analog sensor input ON
7	Di NC/NO	Activation of NC/NO discrete sensor input (BOOST activator)	Discrete sensor input OFF	Discrete sensor input ON
8	MODE	Controller operating mode change	Local mode	Remote mode
9	FB Motor	Feedback control method	Feedback control via RELAY/ PRESSURE	Feedback control via TACHO

Potentiometers

Setting the thresholds for switching to Boost mode, the speed in Boost mode, and the minimum fan speed.

Name	Function	min	max
R12 Boost	Sets the fan speed in Boost mode in local mode	50	100
R13 Minimal	Sets the minimum speed in local mode	15	50
R15 Manual	Sets the level of the analog input signal from the sensor; when this level is exceeded, the system switches from proportional control to Boost mode	0	100

Algorithm for determining the current rotational speed of the active fan.

The controller generates the motor speed value based on the selected control mode, input status, and user-defined parameters.
Depending on the selected controller operating mode (local or remote), the current fan speed is determined by the following parameters.

Parameter	Local mode	Control via Modbus RTU (remote mode)
Boost speed	R12 Boost	HREG_BOOST_SP
Boost status activation threshold	R15 Manual	HREG_BOOST_LVL
Minimum speed	R13 Minimal	HREG_SPEED_MIN
The maximum speed limit in both modes is set via the Modbus parameter		
Discrete input activation	S2 Pos 7	HREG_DI_EN
Analog input activation	S2 Pos 6	HREG_AIN_EN

The speed calculation algorithm consists of sequential steps in the following order.

Boost mode application

Boost mode has higher priority than the base speed. Boost mode can be activated in two ways:
1. Via a NO/NC discrete input (the input type is specified by the NO (Normally Open) / NC (Normally Closed) parameter).
When this input is activated, Boost mode is enabled.
2. Via a 0–10 V analog signal. If the analog input value exceeds the set Boost threshold, Boost mode is activated.
When Boost mode is activated, the speed is set according to the value specified for this mode.

Base Speed Calculation

The base speed is determined as follows:

- 1. If the 0–10 V analog input is active, the speed is proportional to this signal
- 2. If the analog input is not active: • In local mode, the speed is 0 • In remote mode, the speed is HREG_SPEED_SP»

Speed limits

After the value is calculated, it is checked for compliance with the system limits.
Minimum speed: if the calculated speed is lower than the minimum speed set by the user, it is automatically increased to this value. The minimum speed value is taken from R13 Minimal or from the HREG_SPEED_MIN register
Maximum speed: if the calculated speed exceeds the set maximum, it is limited to this value. The maximum speed value is taken from the HREG_SPEED_MAX register

Verifying the motor's operating permission

The motor stops in the following cases:
in remote mode, HREG_MOTOR_EN = 0
the final speed after all calculations is < 20%
In these cases, the speed is set to 0.

Running algorithm of the BMS Module module when controlling a single fan

Normal operation when the system is in the RUN state:
- The controller receives signals from the sensors and responds to Modbus requests
- The controller determines the target fan speed
- The corresponding fan speed control signal is set.

Running in fault mode when the system enters the ALARM state:
- The fan is turned off;
- The control signal is set to 0%;
- The controller receives signals from the sensors and responds to Modbus requests

Warning. Alarm reset mechanism:
- **In local mode – reboot the controller by disconnecting and reconnecting the power supply;**
- **In remote mode – write 1 to HREG_ALARM_RESET.**

Current status indication

The status is indicated by an LED.
The indication follows a status priority scheme.
Fault conditions have the highest priority, warnings have a lower one, and normal operation has the lowest.

LED Indication	Controller Status	Description
Red (steady)	Fault (Motor Alarm)	Motor fault detected
Red (flashing) 0.25 sec 4 Hz	Warning (Modbus Timeout Warning)	Modbus communication delay warning (timeout) Occurs if the time since the last packet was received from the master device exceeds the Modbus communication timeout parameter (default value – 30 sec).
Green (flashing) 0.5 sec 1 Hz	Normal operation (Run)	The device is running normally

REMOTE CONTROL MODE

Default Modbus configuration parameters

- Baud Rate: 115200
- Parity: None
- Stop Bits: 2
- Data Bits: 8
- Modbus Mode: RTU
- Slave ID: set via DIP switches in the range of 1–31

If local mode has been enabled using DIP switch S2-8, the default communication parameters will be set.

The controller's address in the Modbus network is determined by the position of DIP switches S2 Pos 1–5. A value of 0 (all five switches in the OFF position) puts the device into silent mode: it does not respond to Modbus address requests and cannot operate in remote mode, but remains accessible for service configuration via broadcast messages. For standard address-based operation, use addresses 1–31. Changing communication parameters is supported, but the controller must be rebooted for the changes to take effect.

Configuration

Configuration is performed using the Modbus RTU protocol by writing the required value to a register. After configuring all parameters, save the settings by sending a special command.

Address encoding:

Each enabled switch adds its coefficient to the sum, which is the address. You can use a dec to binary converter
$(10101)_2 = (21)_{10}$

1 2 4 8 16
| | | | |
D1 D2 D3 D4 D5

ON=1 OFF = 0

ADDR=SUM

ADDR = (D1*1)+(D2*2)+(D3*4)+(D4*8)+(D5*16)

Example: D1,D2,D4 - ON, D3,D5 - OFF

(1*1)+(1*2)+(0*4)+(1*8)+(0*16) = 1+2+8=11 $(01011)_2 = (11)_{10}$

Once all five switches are set to OFF, the controller will not respond to master requests but will remain accessible for configuration at address 0 (broadcast).

Modbus RTU Function Codes

The BMS Vent controller supports the following standard Modbus RTU functions:

Function code	Description	Applicable registers
0x03 (03)	Read Holding Registers	4xxxx
0x04 (04)	Read Input Registers	3xxxx
0x06 (06)	Write Single Holding Register	4xxxx
0x10 (16)	Write Multiple Holding Registers	4xxxx

Exception codes

Code	Name	Value
01	INCORRECT FUNCTION	The function code received in the request is not a valid operation for the slave device.
02	INCORRECT DATA ADDRESS	The data address received in the request is not a valid address for the slave device.
03	INCORRECT DATA VALUE	The value contained in the request data field is not a valid value for the slave device.

REGISTER TABLE

Input Register

Registers that support read operations.

Register Address	Name	Description	Min.	Max.	Measurement unit
30100	IREG_DEVICE_STATUS	Fault status: 0 = OK 1 = Fan fault	0	1	NA
30101	IREG_CTRL_MODE	Device running mode: 1 = Modbus 0 = Local	0	1	NA
30102	IREG_A_SPEED	Current motor speed	0		RPM, %
30104	IREG_DI_STATE	DI input status: 0 = Inactive 1 = active	0	1	NA
30105	IREG_AIN_SCALED	calculated sensor value	0	29999	NA
30106	IREG_POT_BOOST	BOOST speed, set using potentiometer R12	15	100	%
30107	IREG_POT_MIN	minimum speed, set using potentiometer R13	0	50	%
30108	IREG_POT_MANUAL	BOOST transition threshold, set using potentiometer R15	-	100	%
30109	IREG_DIP_MASK	status of switches S2	0	-	NA
30110	RESERVED	Reserved			NA
30111	IREG_AIN_RAW	Input signal level 0…10V		100	%
30112	RESERVED	Reserved			NA
30113	IREG_FW_VER_H	Upper bytes of the firmware identifier			NA
30114	IREG_FW_VER_L	Lower bytes of the firmware identifier			NA

Encoding of DIP switch and DI states

The IREG_DIP_MASK register contains a bit mask for the DIP switch states.
If the corresponding bit is set to 1, the corresponding function is active

Bit	Name	Function
0	AI 0-10V	AI 0–10V input enabled (J6)
1	DI activator	DI Enable (J7)
2	MODE	Mode Selection Switch (J8)
3	FB Motor	Feedback Fault Control Switch (J9)
4	DI	DI input status

Holding Register

Registers that support read and write operations.

Register Address	Name	Description and value	Min.	Max.	By default	Unit
40100	HREG_MOTOR_EN	operating permission: 1 = Enabled 0 = Disabled	0	1	1	NA
40101		Reserved				NA
40102	HREG_SPEED_SP	base speed	0	100	0	%
40103	HREG_BOOST_SP	BOOST speed	50	100	90	%
40104	HREG_SPEED_MIN	minimum speed	0	50	20	%
40105	HREG_SPEED_MAX	maximum speed	60	100	100	%
40106	HREG_DI_EN	discrete input activation: 1 = Enabled 0 = Disabled	0	1	1	NA
40107	HREG_DI_CONTACT_TYPE	discrete input activation: 1 = NC 0 = NO	0	1	0	NA
40108	HREG_AIN_EN	0_10V input activation: 1 = Enabled, 0 = Disabled	0	1	1	NA
40109	HREG_AIN_BOOST_THR	threshold for switching from proportional control to BOOST	0	100	65	%
40110	HREG_FB_TYPE	feedback control method: 0 = tacho 1 = discrete input	0	1	1	NA
40111	HREG_PPR	pulses per revolution	1	5	2	NA
40112	HREG_FB_CONTACT_TYPE	feedback contact type: 1 = NC, 0 = NO	0	1	1	NA
40113	HREG_UNITS	display unit settings on the A25 panel	0	10	0	NA
40114	HREG_AIN_MIN	min sensor value 0-10	0	29999	0	NA
40115	HREG_AIN_MAX	max sensor value 0-10	0	29999	100	NA
40116	HREG_COM_TIMEOUT	communication timeout	0	240	30	s
40117	HREG_COM_BAUD	communication speed: 0 = 9600 1 = 14400 2 = 19200 3 = 38400 4 = 57600 5 = 115200	0	5	5	NA
40118	HREG_COM_STOP_BITS	stop bit 0 = 1 stopbits 1 = 1.5 stopbits 2 = 2 stopbits	0	2	2	NA
40119	HREG_COM_PARITY	parity check: 0 = None 1 = even 2 = odd	0	2	0	NA

Register Address	Name	Description and value	Min.	Max.	By default	Unit
40120	-	Reserved				NA
40127	HREG_ALARM_RESET	special command: 1 = reset alarms			-	NA
40128	HREG_SAVE_CFG	special command: 1 = save parameters to non-volatile memory			0	NA
40129	HREG_FACTORY_RESET	special command: 42448 = reset parameters and reboot			0	NA

SWITCHING OPERATING MODES

- In remote mode, if communication is lost, the system will switch to local mode. Once communication is restored, the system will return to remote mode.
- To disable feedback control in local mode, set switch S2-9 to ON. If the value of the HREG_FB_POLARITY register is 0 (default value), feedback control will not occur; the system will assume that a positive signal has been received.
- The controller may switch to local mode in the absence of communication; therefore, to ensure stable operation, it is necessary to correctly configure local mode using switches S2, S3, and potentiometers, even if operation is planned only in remote mode.

STORAGE AND TRANSPORTATION REGULATIONS

- Store the unit in the manufacturer's original packaging box in a dry closed ventilated premise with temperature range from +5 ˚C to +40 ˚C and relative humidity up to 70 %.
- Storage environment must not contain aggressive vapors and chemical mixtures provoking corrosion, insulation, and sealing deformation.
- Use suitable hoist machinery for handling and storage operations to prevent possible damage to the unit.
- Follow the handling requirements applicable for the particular type of cargo.
- The unit can be carried in the original packaging by any mode of transport provided proper protection against precipitation and mechanical damage. The unit must be transported only in the working position.
- Avoid sharp blows, scratches, or rough handling during loading and unloading.
- Prior to the initial power-up after transportation at low temperatures, allow the unit to warm up at operating temperature for at least 3-4 hours.

MANUFACTURER'S WARRANTY

The product is in compliance with EU norms and standards on low voltage guidelines and electromagnetic compatibility. We hereby declare that the product complies with the provisions of Electromagnetic Compatibility (EMC) Directive 2014/30/EU of the European Parliament and of the Council, Low Voltage Directive (LVD) 2014/35/EU of the European Parliament and of the Council and CE-marking Council Directive 93/68/EEC. This certificate is issued following test carried out on samples of the product referred to above.
The manufacturer hereby warrants normal operation of the unit for 24 months after the retail sale date provided the user's observance of the transportation, storage, installation, and operation regulations. Should any malfunctions occur in the course of the unit operation through the Manufacturer's fault during the guaranteed period of operation, the user is entitled to get all the faults eliminated by the manufacturer by means of warranty repair at the factory free of charge. The warranty repair includes work specific to elimination of faults in the unit operation to ensure its intended use by the user within the guaranteed period of operation. The faults are eliminated by means of replacement or repair of the unit components or a specific part of such unit component.

The warranty repair does not include:

- routine technical maintenance
- unit installation/dismantling
- unit setup

To benefit from warranty repair, the user must provide the unit, the user's manual with the purchase date stamp, and the payment paperwork certifying the purchase. The unit model must comply with the one stated in the user's manual. Contact the Seller for warranty service.

The manufacturer's warranty does not apply to the following cases:

- User's failure to submit the unit with the entire delivery package as stated in the user's manual including submission with missing component parts previously dismounted by the user.
- Mismatch of the unit model and the brand name with the information stated on the unit packaging and in the user's manual.
- User's failure to ensure timely technical maintenance of the unit.
- Damage to the unit casing and internal components caused by the user.
- Redesign or engineering changes to the unit.
- Replacement and use of any assemblies, parts and components not approved by the manufacturer.
- Unit misuse.
- Violation of the unit installation regulations by the user.
- Violation of the unit control regulations by the user.
- Unit connection to power mains with a voltage different from the one stated in the user's manual.
- Unit breakdown due to voltage surges in power mains.
- Discretionary repair of the unit by the user.
- Unit repair by any persons without the manufacturer's authorization.
- Expiration of the unit warranty period.
- Violation of the unit transportation regulations by the user.
- Violation of the unit storage regulations by the user.
- Wrongful actions against the unit committed by third parties.
- Unit breakdown due to circumstances of insuperable force (fire, flood, earthquake, war, hostilities of any kind, blockades).
- Missing seals if provided by the user's manual.
- Failure to submit the user's manual with the unit purchase date stamp.
- Missing payment paperwork certifying the unit purchase.



FOLLOWING THE REGULATIONS STIPULATED HEREIN WILL ENSURE A LONG AND TROUBLE-FREE OPERATION OF THE UNIT



USER'S WARRANTY CLAIMS SHALL BE SUBJECT TO REVIEW ONLY UPON PRESENTATION OF THE UNIT, THE PAYMENT DOCUMENT AND THE USER'S MANUAL WITH THE PURCHASE DATE STAMP

CERTIFICATE OF ACCEPTANCE

Unit Type	Controller for integrating fans with EC motors into the BMS
Model	
Serial Number	
Manufacture Date	
Quality Inspector's Stamp	

SELLER INFORMATION

Seller	
Address	
Phone Number	
E-mail	
Purchase Date	
This is to certify acceptance of the complete unit delivery with the user's manual. The warranty terms are acknowledged and accepted.	
Customer's Signature	

Seller's Stamp

INSTALLATION CERTIFICATE

The _____ unit is installed pursuant to the requirements stated in the present user's manual.		
Company name		
Address		
Phone Number		
Installation Technician's Full Name		
Installation Date:	**Signature:**	
The unit has been installed in accordance with the provisions of all the applicable local and national construction, electrical and technical codes and standards. The unit operates normally as intended by the manufacturer.		
Signature:		

Installation Stamp

WARRANTY CARD

Unit Type	Controller for integrating fans with EC motors into the BMS
Model	
Serial Number	
Manufacture Date	
Purchase Date	
Warranty Period	
Seller	

Seller's Stamp

BLAUBERG

Manufacturer: Ventilation Systems LLC,
Ukraine, Kyiv, 1 M. Kotsyubynskoho Street
Address of production facilities:
Ukraine, Kyiv Region, Fastiv District, Boyarka, 36 Sobornosti Street

blaubergventilatoren.net
B256-2EN-01