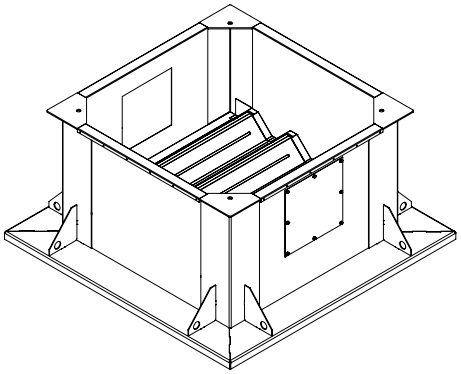

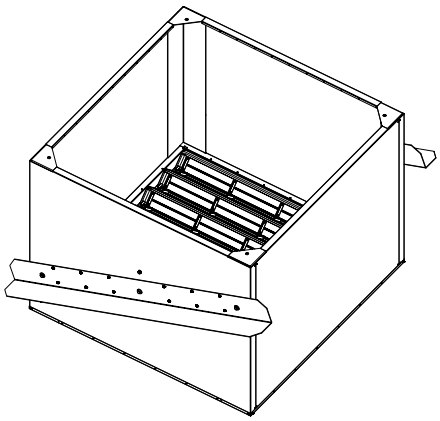

BLAUBERG

Installation Instruction

SM-AF
Mounting curb

APPLICATION

The mounting curb is designed to install a roof fan on building roofs in both general ventilation systems and smoke exhaust systems.

DESIGNATION KEY

SM-AF - 0 0 0 0 - 315/355

Standard size [mm]

Damper actuator type
0: none;1: 24 V electric actuator; 2: 230 V electric actuator

Built-in damper
0: none; 1: exhaust damper; 2: supply damper
3: exhaust damper DU (with electric actuator)

Thermal insulation
0: none; 1: thermal insulation available

Roof type
0: to be installed on a flat roof; 1: to be installed on a pitched roof

SM-AF: mounting curb

DESIGN

The mounting curb is a box-shaped structure that forms an air duct with a square cross-section.
The structure consists of a frame (1), which bears the main load, and side panels (2).
The top part features a mounting surface for securing the fan.
A damper (4) is built into the bottom part.
The outer frames feature supports to be installed on a roof (3).
The mounting box can be equipped with a side inspection hatch.

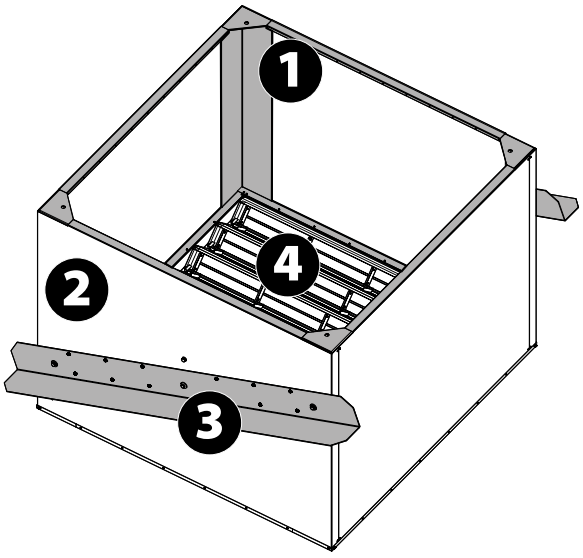

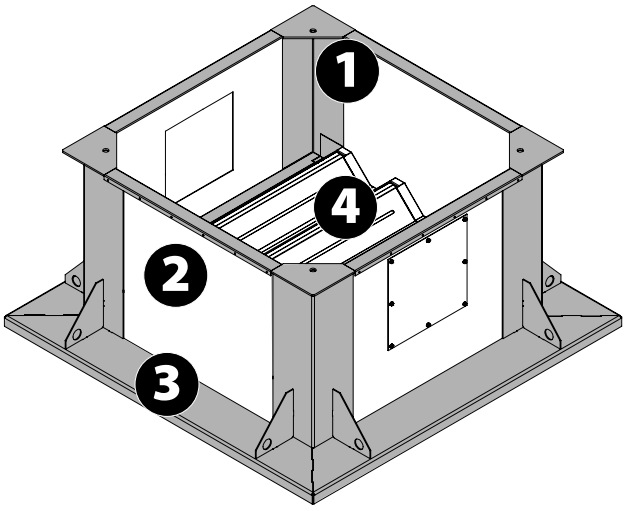

Name	Dimensions [mm]					Weight [kg]
	A	A1	B	C	H	
SM-AF-0000-315/355	480	505	590	800	550	39.5
SM-AF-0010-315/355						43.5
SM-AF-0020-315/355						50.5
SM-AF-0100-315/355						54.5
SM-AF-0000-400/450	580	605	692	900		46
SM-AF-0010-400/450						51.5
SM-AF-0020-400/450						58.5
SM-AF-0100-400/450						64
SM-AF-0000-500	640	675	760	970		49
SM-AF-0010-500						56
SM-AF-0020-500						63
SM-AF-0100-500						70
SM-AF-0000-560/630	750	825	910	1120		56.5
SM-AF-0010-560/630						66.5
SM-AF-0020-560/630						72.5
SM-AF-0100-560/630						82.5
SM-AF-0000-710/800	980	1055	1140	1350		68
SM-AF-0010-710/800						83
SM-AF-0020-710/800						88
SM-AF-0100-710/800						103
SM-AF-0000-900	1050	1125	1208	1420		71
SM-AF-0010-900						88.5
SM-AF-0020-900						92
SM-AF-0100-900						109.5
SM-AF-0000-1000/1120	1340	1415	1498	1710		85
SM-AF-0010-1000/1120						112
SM-AF-0020-1000/1120						115
SM-AF-0100-1000/1120						137
SM-AF-0110-1000/1120						140
SM-AF-0000-1250	1500	1605	1688	1900		112
SM-AF-0010-1250						151
SM-AF-0020-1250						156
SM-AF-0100-1250						140
SM-AF-0110-1250						180
SM-AF-0120-1250						185
SM-AF-1010-1000/1120	1340	1410	1500	1800	1154	183.5

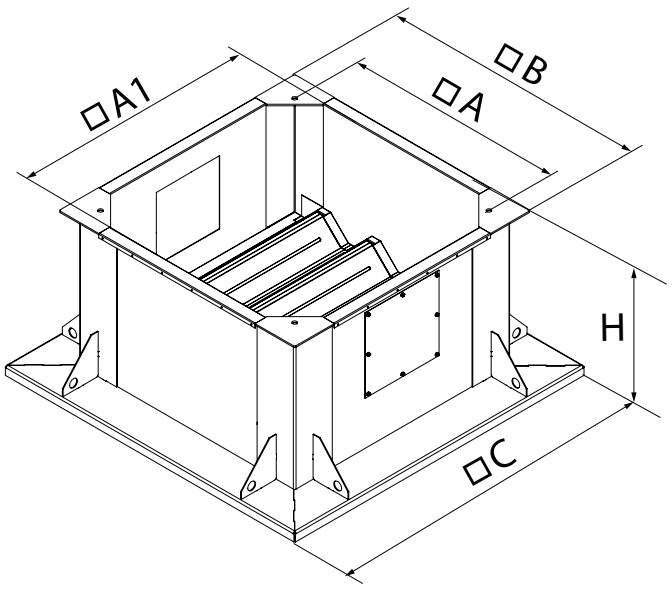

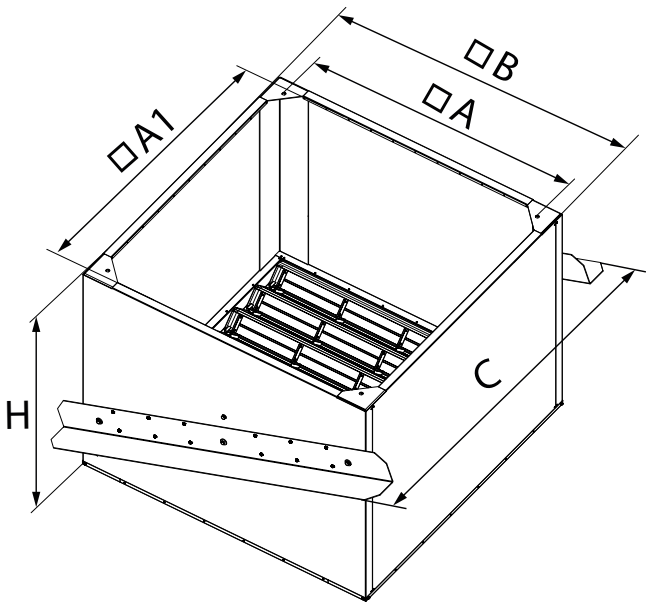

INSTALLATION

Installation must be performed in accordance with the requirements of State Standards of Ukraine (DSTU) B A.3.2-12:2009, Building Code of Ukraine (DBN) V.2.6-220:2017, DBN V.2.5-67:2013, and the recommendations stipulated in this manual.

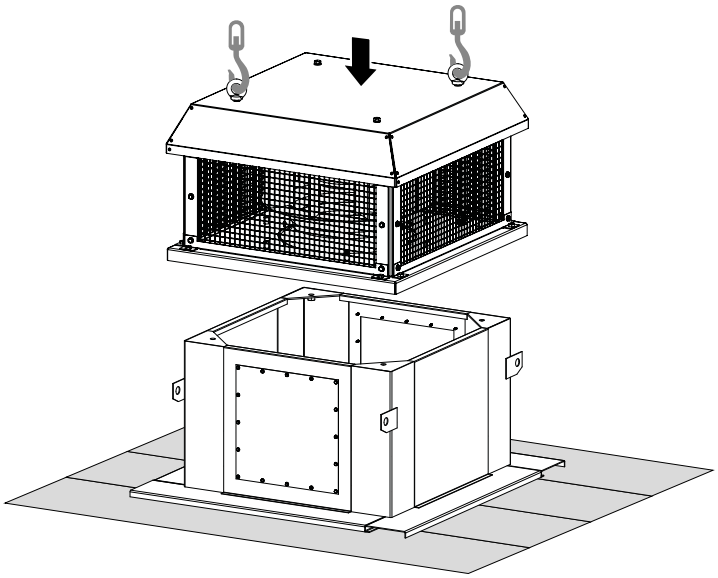

Installing the SM-AF on a pitched roof

- The product can be installed on a roof with a pitch angle of 0 to 20°.
- Ensure that the fan is positioned horizontally when installing.
- Prepare the opening for the curb (W+30 mm). The gap between the edge of the opening and the curb wall must not exceed 15 mm.
- Attach the L-shaped mounting angles provided in the mounting kit to the center opening of the curb with a bolt.
- Place the assembled structure onto the roof with the mounting angles and use a spirit level to ensure the curb flange is horizontal.
- Drill Ø13.0 … 13.1 mm holes in the curb using the markings on the angles.
- Use a riveter to fit M10 threaded rivets (included in the mounting kit) into the holes.
- Fix the angles to the curb with bolts and washers from the mounting kit.
- Secure the angles with Ø6.3 DIN 7504 screws.

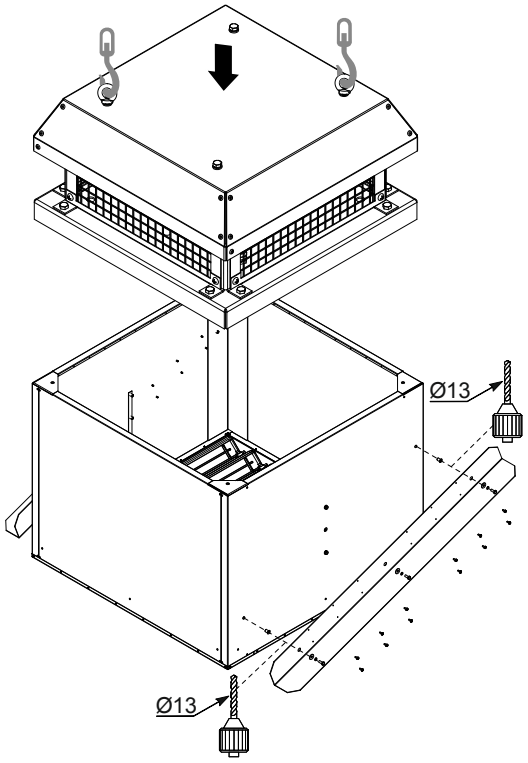

CERTIFICATE OF ACCEPTANCE
Mounting curb
SM-AF_____

Manufacture Date

Sold by
(name of sales organization, shop stamp)

Approval mark

Sales date