

Installation instruction

SL for Blauair

Air flow regulator

The SL air flow regulator is a multi-leaf valve with built-in rotating plates, designed to regulate air flow or automatically shut off a rectangular air duct.

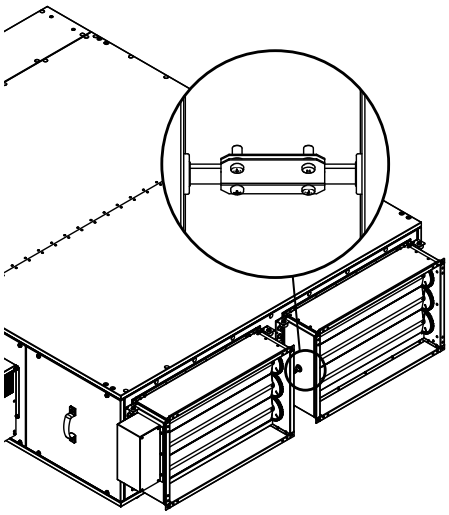

SL P

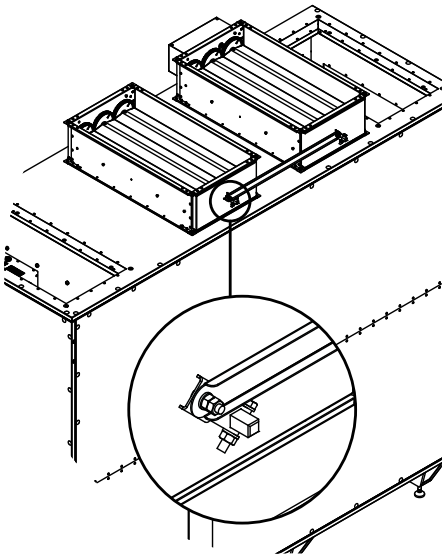

SL V

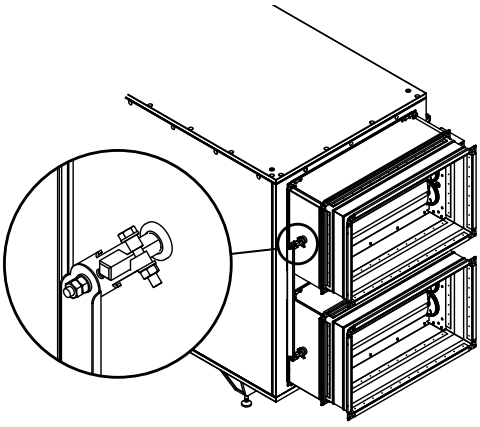

SL H

Connecting SL V and SL H with a linkage

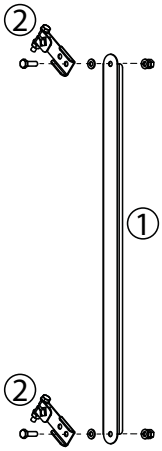

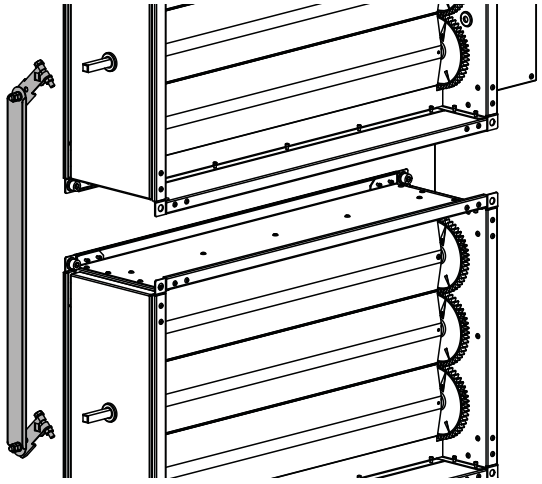

1. Secure the linkage rod 1 to the linkages 2 with screws.

2. Install the linkage on the damper stems and secure it by tightening the screws on the linkages.

When installing the linkage on the damper shafts, the damper blades must be in the closed position; when the electric drive is engaged, they must be in the open position. The maximum angle of blade rotation (stroke) is 90°.

The direction of rotation of the electric actuator must not obstruct the rotation of the blades.
If the blades on the assembled dampers do not rotate, reinstall the linkage by removing it from the rods and turning the linkages 90°.

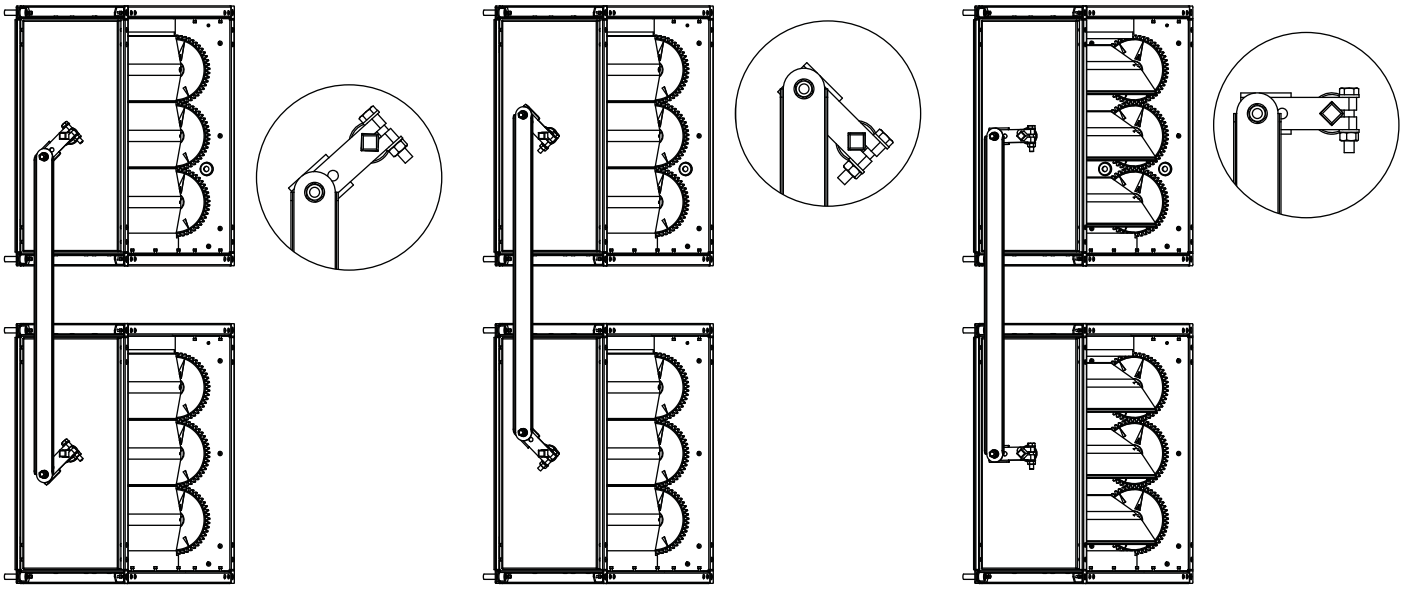

Closed position | Closed position | Open position

INSTALLATION AND CONNECTION

Installation tools: cordless impact wrench (or equivalent), socket set, bits: PH1, PH2, NX.

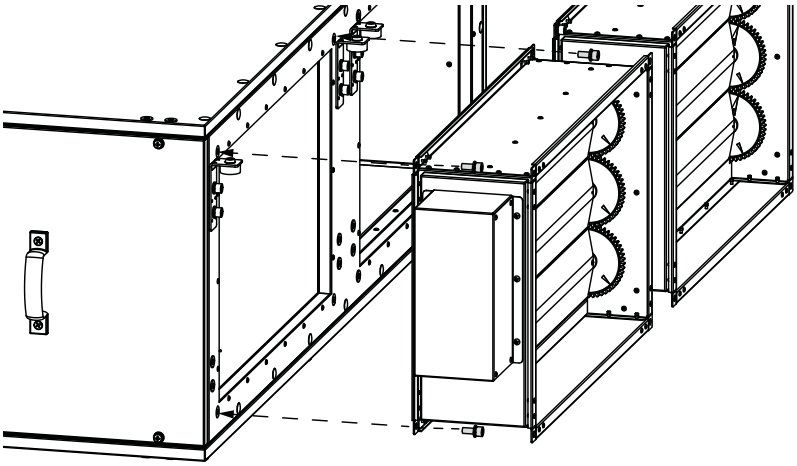

1. The air flow regulator is attached to the unit using screws.

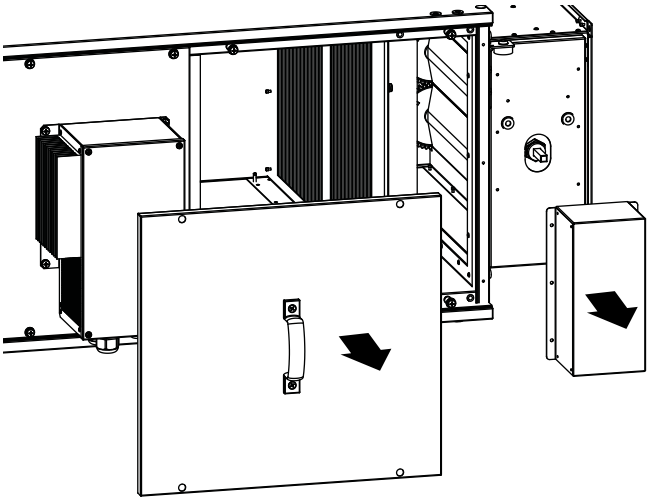

2. Remove the protective cover of the actuator and the service panel from the appropriate section of the unit.

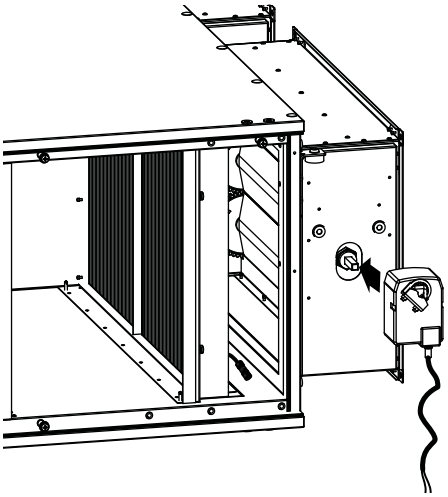

3. Install the drive onto the shaft.

ENSURE THE POWER MAINS IS OFF PRIOR TO ANY OPERATIONS WITH THE UNIT

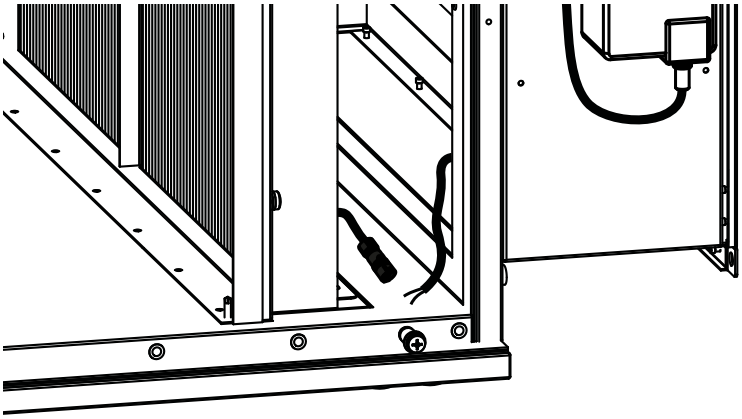

4. Feed the drive cable through the holes in the wall of the regulator and in the partition of the unit section.

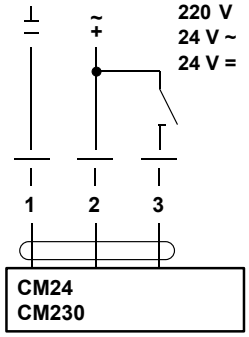

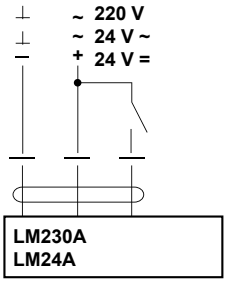

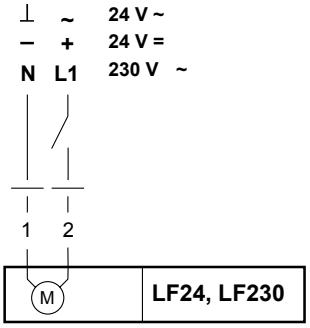

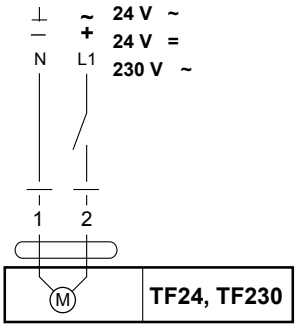

5. Connect the drive cable to the connector according to the appropriate electrical wiring diagram.

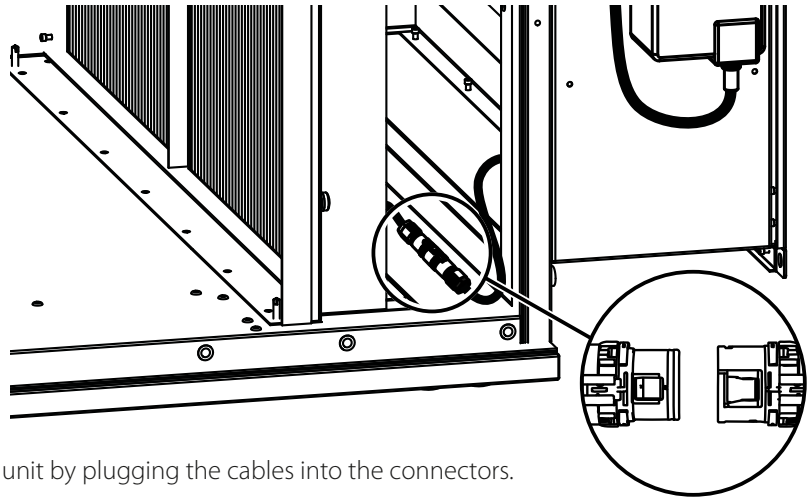

6. Connect the drive to the unit by plugging the cables into the connectors.

CAUTION! Before supplying power, make sure there are no obstructions to the rotation of the blades (90° stroke).

7. Apply power to the SL regulator.