

AIR HANDLING UNIT

Reneo S 350
Reneo SE 350
Reneo S 351
Reneo SE 351
Reneo S 380
Reneo SE 380
Reneo S 400
Reneo SE 400
Reneo S 550
Reneo SE 550

EN ***USER'S MANUAL***

BLAUBERG

CONTENTS

Safety requirements ... 2
Purpose ... 4
Delivery set ... 4
Designation key ... 4
Technical data ... 5
Design and operating principle ... 10
Mounting and set-up ... 12
Connection to power mains ... 16
Technical maintenance ... 19
Troubleshooting ... 20
Storage and transportation regulations ... 20
Manufacturer's warranty ... 21
Certificate of acceptance ... 23
Seller information ... 23
Installation certificate ... 23
Warranty card ... 23

This user's manual is a main operating document intended for technical, maintenance, and operating staff.
The manual contains information about purpose, technical details, operating principle, design, and installation of the Reneo S(E) 350/351/380/400/550 unit and all its modifications.
Technical and maintenance staff must have theoretical and practical training in the field of ventilation systems and should be able to work in accordance with workplace safety rules as well as construction norms and standards applicable in the territory of the country.

SAFETY REQUIREMENTS

This unit is not intended for use by persons (including children) with reduced physical, sensory or mental capabilities, or lack of experience and knowledge, unless they have been given supervision or instruction concerning use of the unit by a person responsible for their safety.
Children should be supervised to ensure that they do not play with the unit.
This appliance can be used by children aged from 8 years and above and persons with reduced physical, sensory or mental capabilities or lack of experience and knowledge if they have been given supervision or instruction concerning use of the appliance in a safe way and understand the hazards involved.
Cleaning and user maintenance shall not be done by children without supervision.
Children shall not play with the appliance.

If the supply cord is damaged, it must be replaced by the manufacturer, its service agent, or similarly qualified persons in order to avoid a safety hazard.

Ensure that the unit is switched off from the supply mains before removing the guard.

Precautions must be taken to avoid the back-flow of gases into the room from the open flue of gas or other fuel-burning appliances.

The appliance may adversely affect the safe operation of appliances burning gas or other fuels (including those in other rooms) due to back flow of combustion gases. These gases can potentially result in carbon monoxide poisoning. After installation of the unit the operation of flued gas appliances should be tested by a competent person to ensure that back flow of combustion gases does not occur.

Do not attach the product to the support using glue or adhesives. Use only the fastening method specified in the "User's manual".

All operations described in this manual must be performed by qualified personnel only, properly trained and qualified to install, make electrical connections and maintain ventilation units.
Do not attempt to install the product, connect it to the mains, or perform maintenance yourself.
This is unsafe and impossible without special knowledge.
Disconnect the power supply prior to any operations with the unit.
All user's manual requirements as well as the provisions of all the applicable local and national construction, electrical, and technical norms and standards must be observed when installing and operating the unit.
Disconnect the unit from the power supply prior to any connection, servicing, maintenance, and repair operations.
Connection of the unit to power mains is allowed by a qualified electrician with a work permit for the electric units up to 1000 V after careful reading of the present user's manual.
Check the unit for any visible damage of the impeller, the casing, and the grille before starting installation. The casing internals must be free of any foreign objects that can damage the impeller blades.
While mounting the unit, avoid compression of the casing! Deformation of the casing may result in motor jam and excessive noise.
Misuse of the unit and any unauthorised modifications are not allowed.
Transported air must not contain any dust or other solid impurities, sticky substances, or fibrous materials.
Do not use the unit in a hazardous or explosive environment containing spirits, gasoline, insecticides, etc.
Do not close or block the intake or extract vents in order to ensure the efficient air flow.
Do not sit on the unit and do not put objects on it.
The information in this user's manual was correct at the time of the document's preparation.
The Company reserves the right to modify the technical characteristics, design, or configuration of its products at any time in order to incorporate the latest technological developments.
Never touch the unit with wet or damp hands.
Never touch the unit when barefoot.
Do not install or use the product until all construction and finishing work has been completed in the room where it is to be installed.
BEFORE INSTALLING ADDITIONAL EXTERNAL DEVICES, READ THE RELEVANT USER MANUALS.

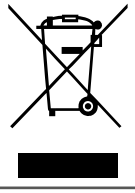

THE PRODUCT MUST BE DISPOSED SEPARATELY AT THE END OF ITS SERVICE LIFE.

DO NOT DISPOSE THE UNIT AS UNSORTED DOMESTIC WASTE.

PURPOSE

The unit is designed to ensure continuous mechanical air exchange in houses, offices, hotels, cafes, conference halls, and other utility and public spaces as well as to recover the heat energy contained in the air extracted from the premises to warm up the filtered stream of intake air.
The unit is not intended for organizing ventilation in swimming pools, saunas, greenhouses, summer gardens, and other spaces with high humidity.
Due to the ability to save heating energy by means of energy recovery, the unit is an important element of energy-efficient premises.
The unit is a component part and is not designed for stand-alone operation. It is rated for continuous operation.
Transported air must not contain any flammable or explosive mixtures, evaporation of chemicals, sticky substances, fibrous materials, coarse dust, soot and oil particles or environments favourable for the formation of hazardous substances (toxic substances, dust, pathogenic germs).

DELIVERY SET

Name	Number
Air handling unit	1 pc.
User's manual	1 pc.
Drain pipe	1 pc.
Packing box	1 pc.

DESIGNATION KEY

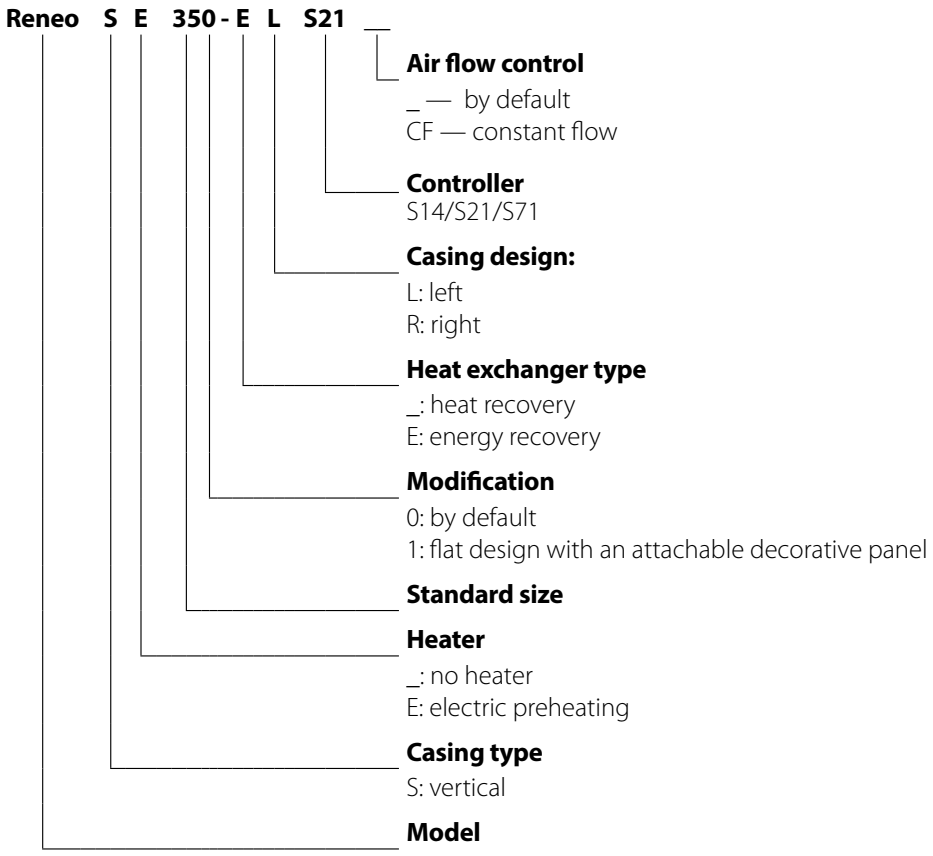

TECHNICAL DATA

The unit is designed for indoor application with the ambient temperature ranging from +1 °C up to +40 °C and relative humidity up to 60 % without condensation. In cold, damp rooms, there is a possibility of freezing or condensation inside and outside the casing.
In order to prevent condensation on the internal walls of the unit, it is necessary that the surface temperature of the casing is 2-3 °C above the dew point temperature of the transported air.
The unit should be operated continuously, and in cases where ventilation is not necessary, reduce the air flow of the fans to a minimum (20%). This will ensure a favorable indoor climate and reduce the amount of condensation inside the unit, which can damage electronic components. Never use the unit for dehumidification, for example, of new buildings.
The unit is rated as a Class I electrical appliance.
Hazardous parts access and water ingress protection rating:
IP22 for the unit connected to the air ducts
IP44 for the unit motors
The unit design is constantly being improved, thus some models may be slightly different from those described in this manual.

Technical data

Model	**Reneo S 350/351**	**Reneo S 350-E/351-E**	**Reneo SE 350/351**	**Reneo SE 350-E/351-E**
Supply voltage [V/50 (60) Hz]	1~230	1~230	1~230	1~230
Maximum unit power without the heater [W]	213	213	213	213
Heating capacity [W]	-	-	1050	1050
Maximum unit power [W]	213	213	1263	1263
Maximum unit current without the heater [A]	1,62	1,62	1,62	1,62
Electric heater current [A]	-	-	4,66	4,66
Maximum unit current [A]	1,62	1,62	6,28	6,28
Maximum air flow [m³/h]	410	410	410	410
Sound pressure level at 3 m* [dBA]	26	26	26	26
Transported air temperature [°C]	- 25...+40	- 25...+40	- 25...+40	- 25...+40
Casing material	EPP	EPP	EPP	EPP
Insulation	45 mm	45 mm	45 mm	45 mm
Filtering class of the extract filter	Coarse >60 %			
Filtering class of the supply filter	Coarse >60 % (option ePM1 60 %)			
Connected air duct diameter [mm]	160			
Weight [kg]	26	26	26	26
Heat recovery efficiency [%]	93	83	93	83
Heat exchanger type	Counter-flow			
Heat exchanger material	Polystyrene	Enthalpy membrane	Polystyrene	Enthalpy membrane
SEC class	A+	A	A+	A

*Sound pressure level: dB(A) figures are average spherical free-field, at 70% airflow and 50 Pa, for comparitive use only.

Technical data				
Model	**Reneo S 380**	**Reneo S 380-E**	**Reneo SE 380**	**Reneo SE 380-E**
Supply voltage [V/50 (60) Hz]	230	230	230	230
Maximum unit power without the heater [W]	247	247	247	247
Heating capacity [W]	-	-	1050	1050
Maximum unit power [W]	247	247	1297	1297
Maximum unit current without the heater [A]	1,8	1,8	1,8	1,8
Electric heater current [A]	-	-	3,55	3,55
Maximum unit current [A]	1,8	1,8	5,35	5,35
Maximum air flow [m³/h]	390	390	390	390
Sound pressure level at 3 m* [dBA]	26	26	26	26
Transported air temperature [°C]	- 25...+40	- 25...+40	- 25...+40	- 25...+40
Casing material	EPP	EPP	EPP	EPP
Insulation	25 mm	25 mm	25 mm	25 mm
Filtering class of the extract filter	G4 / Coarse >60 %			
Filtering class of the supply filter	G4 / Coarse >60 % (option F7 / ePM1 60 %)			
Connected air duct diameter [mm]	160	160	160	160
Weight [kg]	26	26	26	26
Heat recovery efficiency [%]	93	83	93	83
Heat exchanger type	Counter-flow	Counter-flow	Counter-flow	Counter-flow
Heat exchanger material	Polystyrene	Enthalpy membrane	Polystyrene	Enthalpy membrane
SEC-class	A+	A	A+	A

*Sound pressure level: dB(A) figures are average spherical free-field, at 70% airflow and 50 Pa, for comparitive use only.

Technical data				
Model	**Reneo S 400**	**Reneo S 400-E**	**Reneo SE 400**	**Reneo SE 400-E**
Supply voltage [V/50 (60) Hz]	230	230	230	230
Maximum unit power without the heater [W]	178	178	178	178
Heating capacity [W]	-	-	1050	1050
Maximum unit power [W]	178	178	1228	1228
Maximum unit current without the heater [A]	1,4	1,4	1,4	1,4
Electric heater current [A]	-	-	4,66	4,66
Maximum unit current [A]	1,4	1,4	6,06	6,06
Maximum air flow [m³/h]	445	445	445	445
Sound pressure level at 3 m* [dBA]	26	26	26	26
Transported air temperature [°C]	- 25...+40	- 25...+40	- 25...+40	- 25...+40
Casing material	EPP	EPP	EPP	EPP
Insulation	45 mm	45 mm	45 mm	45 mm
Filtering class of the extract filter	Coarse >60 %			
Filtering class of the supply filter	Coarse >60 % (option F7 / ePM1 60 %)			
Connected air duct diameter [mm]	160	160	160	160
Weight [kg]	26	26	26	26
Heat recovery efficiency [%]	93	83	93	83
Heat exchanger type	Counter-flow	Counter-flow	Counter-flow	Counter-flow
Heat exchanger material	Polystyrene	Enthalpy membrane	Polystyrene	Enthalpy membrane
SEC-class	A+	A	A+	A

*Sound pressure level: dB(A) figures are average spherical free-field, at 70% airflow and 50 Pa, for comparitive use only.

Technical data				
Model	**Reneo S 550**	**Reneo S 550-E**	**Reneo SE 550**	**Reneo SE 550-E**
Supply voltage [V/50 (60) Hz]	230	230	230	230
Maximum unit power without the heater [W]	346	346	346	346
Heating capacity [W]	-	-	1400	1400
Maximum unit power [W]	346	346	1746	1746
Maximum unit current without the heater [A]	2,4	2,4	2,4	2,4
Electric heater current [A]	-	-	6,21	6,21
Maximum unit current [A]	2,4	2,4	8,61	8,61
Maximum air flow [m³/h]	720	720	720	720
Sound pressure level at 3 m* [dBA]	38	38	38	38
Transported air temperature [°C]	- 25...+40	- 25...+40	- 25...+40	- 25...+40
Casing material	EPP	EPP	EPP	EPP
Insulation	45 mm	45 mm	45 mm	45 mm
Filtering class of the extract filter	Coarse >60 %			
Filtering class of the supply filter	Coarse >60 % (option ePM1 60 %)			
Connected air duct diameter [mm]	200	200	200	200
Weight [kg]	52	55	52,5	55,5
Heat recovery efficiency [%]	93	85	93	85
Heat exchanger type	Counter-flow	Counter-flow	Counter-flow	Counter-flow
Heat exchanger material	Polystyrene	Enthalpy membrane	Polystyrene	Enthalpy membrane
SEC-class	A+	A	A+	A

*Sound pressure level: dB(A) figures are average spherical free-field, at 70% airflow and 50 Pa, for comparitive use only.

Reneo S(E) 350, Reneo S(E) 380, Reneo S(E) 400

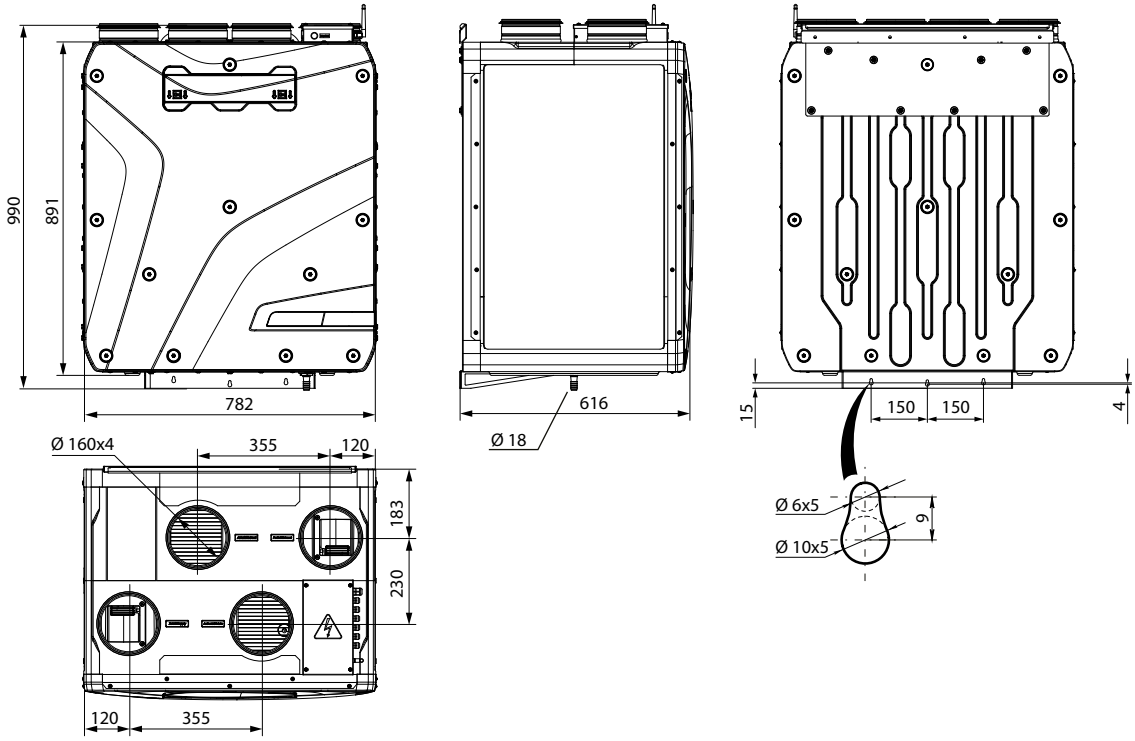

Reneo S(E) 351

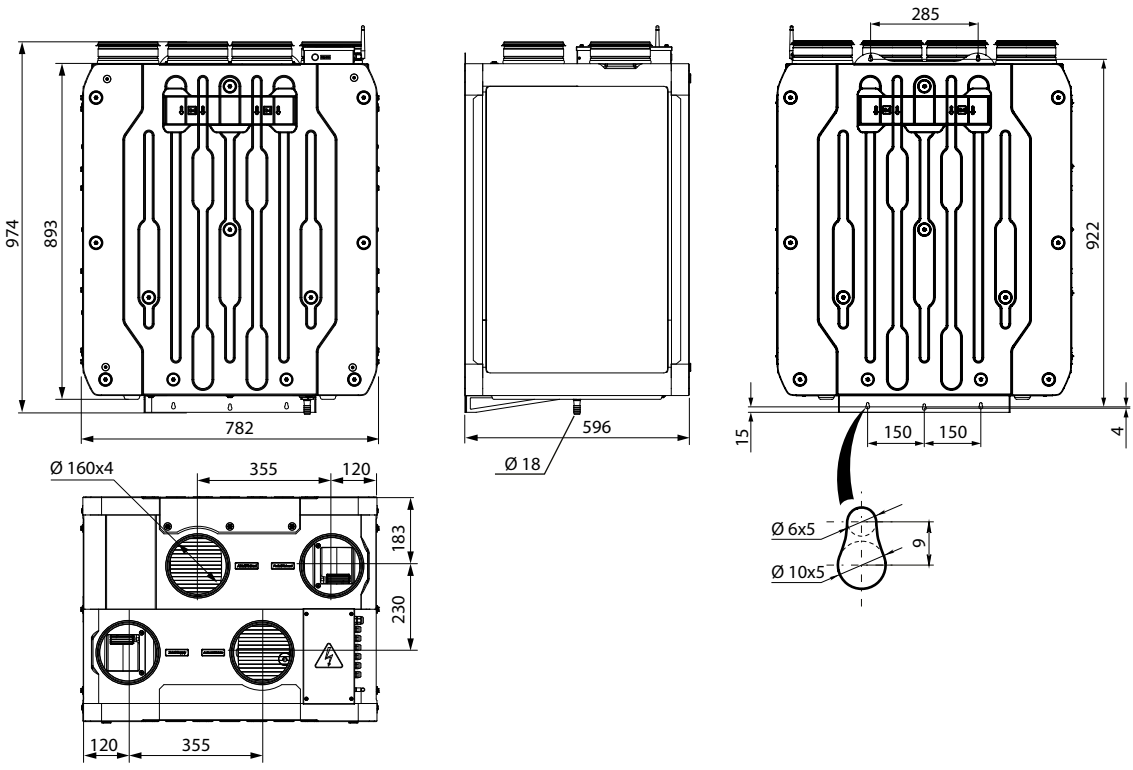

Reneo S(E) 550

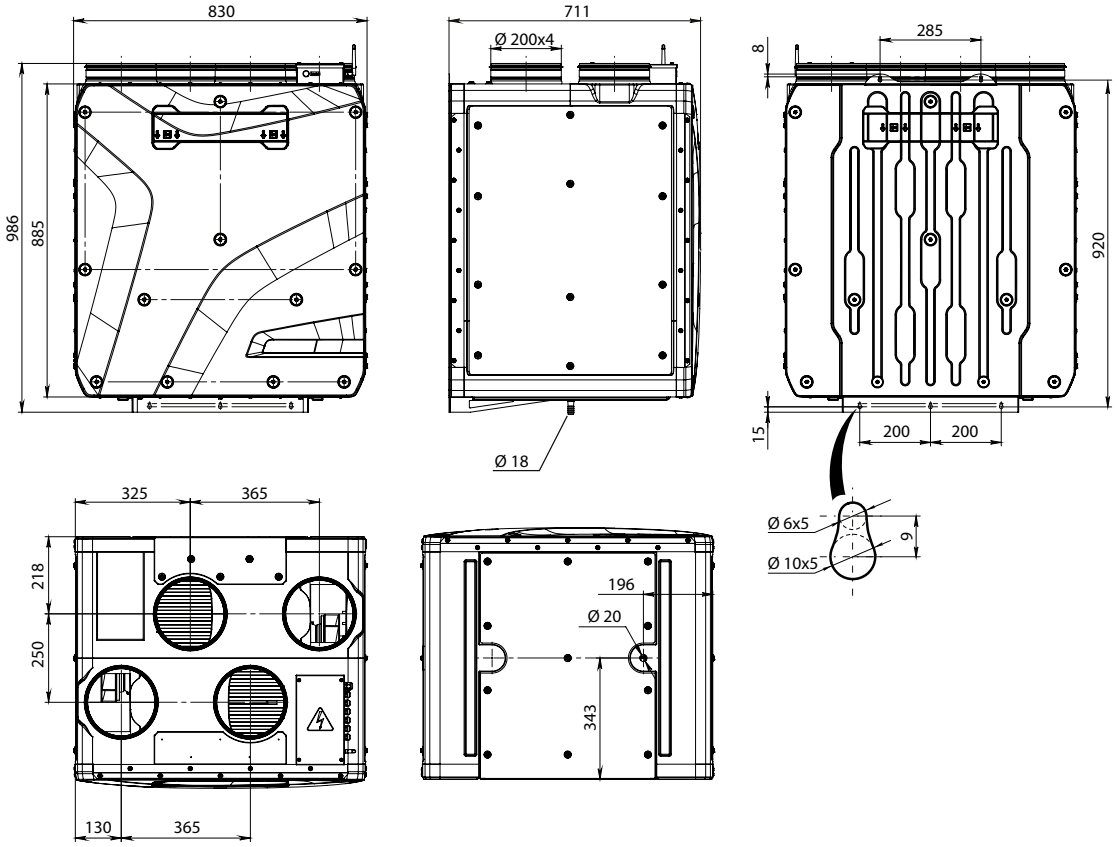
830
986
885
711
Ø 200x4
Ø 18
285
8
920
15
200
200
Ø 6x5
Ø 10x5
9
325
365
218
250
130
365
196
Ø 20
343

DESIGN AND OPERATING PRINCIPLE

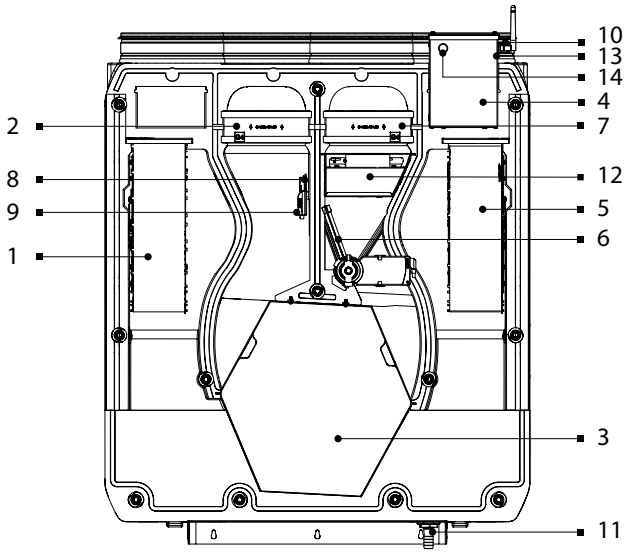

View when the service panel is removed

1 — supply fan, 2 — extract filter, 3 — heat exchanger, 4 — control unit, 5 — extract fan, 6 – bypass damper, 7 — supply filter, 8 — CO2 sensor (option), 9 — humidity sensor (option), 10 – cable glands, 11 – drain pipe, 12 – heater (Reneo SE 350/351, Reneo SE 350-E/351-E, Reneo SE 380, Reneo SE 380-E, Reneo SE 400, Reneo SE 400-E, Reneo SE 550, Reneo SE 550-E), 13 – USB port, 14 – "Setup Mode" button.

The service side of the unit is equipped with a removable panel for filter cleaning or replacement. The control unit is located on top of the unit casing. The power cord and grounding cable are connected to the control unit through the cable glands on the side wall of the unit. Reneo S 350/351/400/550 (-E) S14 units have a USB port under the control unit cover for setting up the unit.
The external panel of the control unit for models Reneo S 350/351/400/550 (-E) S21 and Reneo S 350/351/400/550 (-E) S71 has a "Setup Mode" button.
The supply and extract air temperature difference in the heat exchanger during heat recovery may lead to condensate formation in the unit. The condensate is collected in the drain pan and then removed outside through the drain pipes.

Additional equipment (Not included in the delivery set, available on a separate order)

- **humidity sensor.**

The unit with an installed humidity sensor maintains a set indoor humidity level.
As the extract air humidity rises above the set point, the system automatically switches to the maximum speed. As the extract air humidity rises above the set point, the system automatically switches to the maximum speed;

- **CO_2 sensor**

Measures the level of concentration of carbon dioxide in the room and generates a signal that controls the performance of the fan.
Air capacity control based on CO_2 concentration is an efficient energy saving solution.

Unit operation modes

Heat recovery

Warm extract air from the room flows into the unit and is cleaned in the extract filter. Then the air is moved through the heat exchanger and is exhausted outside with the extract fan. Cold fresh air from outside flows through the air duct into the unit, where it is cleaned by the supply filter. Then the air flows through the heat exchanger and is moved to the room by the supply fan. Supply air is heated in the heat exchanger due to transfer of the heat energy of warm and humid extract air to the cold fresh air. The air streams remain separated in the heat exchanger. Heat recovery minimizes heat losses, which reduces costs for space heating in the cold season.

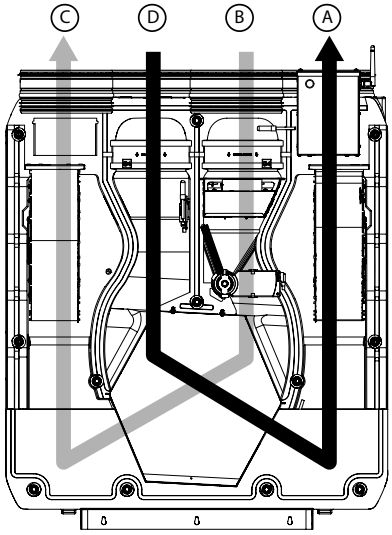

Reneo S 350/351/400/550 (-E) L

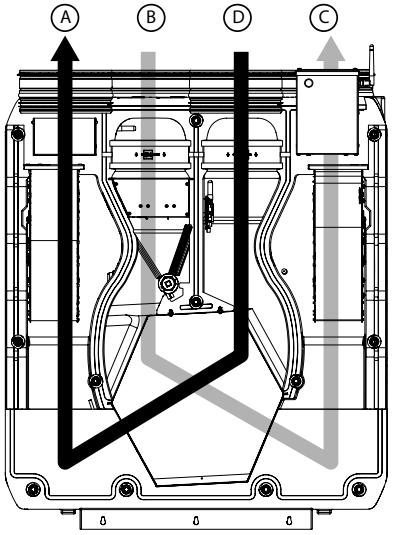

Reneo S 350/351/400/550 (-E) R

A – exhaust air, B – intake air, C – supply air, D – extract air.

No heat recovery

When the "No heat recovery" mode is on, the bypass air damper is open and the supply air flows from outdoors into the room around the heat exchanger.

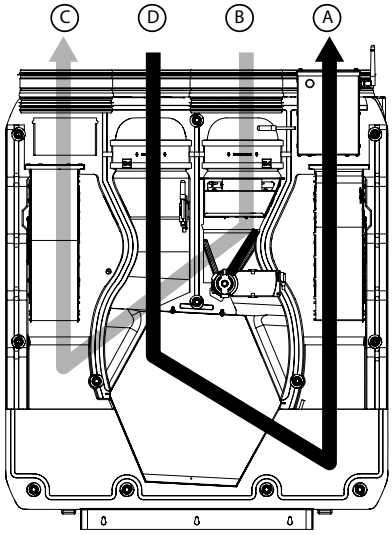

Reneo S 350/351/400/550 (-E) L

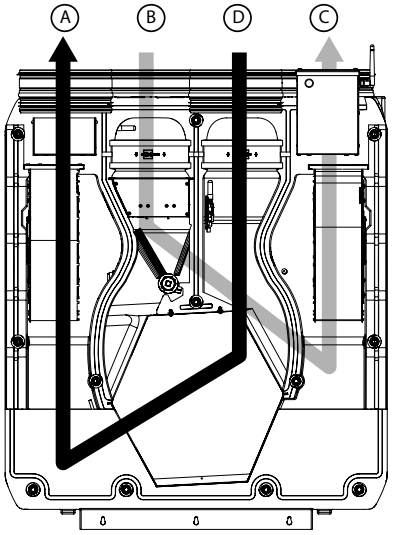

Reneo S 350/351/400/550 (-E) R

A – exhaust air, B – intake air, C – supply air, D – extract air.

Frost protection

Frosting is considered a threat when the exhaust air temperature after the recuperator is below +5 °C and the supply air temperature before the recuperator is below –3 °C for units with preheating, and when the exhaust air temperature after the recuperator is below +3 °C for units without preheating.

The unit has a frost protection mode.

The frost protection mode is activated when the extract air temperature reaches +3 °C.

After the temperature rises, the unit reverts to the previous operation mode.

In case of a risk of freezing, in Reneo S 350/351/400/550 (-E) S14 units the supply fan turns off. After the temperature rises, the unit reverts to the previous operation mode.

For the Reneo S 350/351/400/550 (-E) S21 and Reneo S 350/351/400/550 (-E) S71 units, mode selection and settings are described in the control system's user's manual.

Waring! The bypass-based heat exchanger frost protection mode is unavailable.

MOUNTING AND SET-UP

Installing and connecting the humidity sensor and CO_2 sensor

The humidity s CO_2 sensors are not included in the delivery set, they are ordered separately.
Install the sensors onto the appropriate fixation located on the walls of the unit's casing.
Connect the sensors to the appropriate connectors

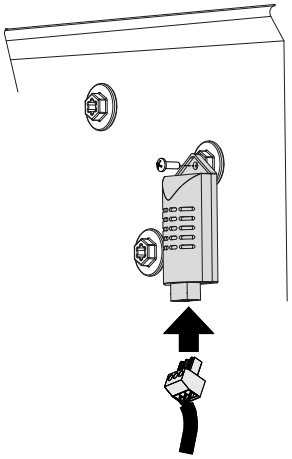

Humidity sensor

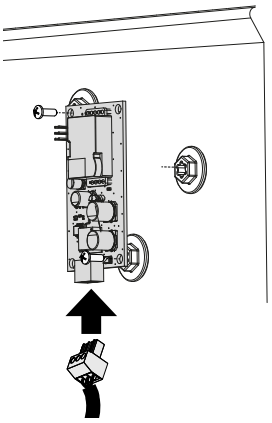

Carbon dioxide sensor (CO_2)

Unit installation

To attain the best performance of the unit and to minimise turbulence-induced air pressure losses connect straight air duct sections to the unit spigots on both sides of the unit.

The minimum straight air duct length is equal to:

- 1 air duct diameter on the intake spigot side;
- 3 air duct diameters on the extract spigot side.

The air ducts must be slipped over the unit flanges until tight. Flexible air ducts must be rigidly fixed with a metal worm clamp.

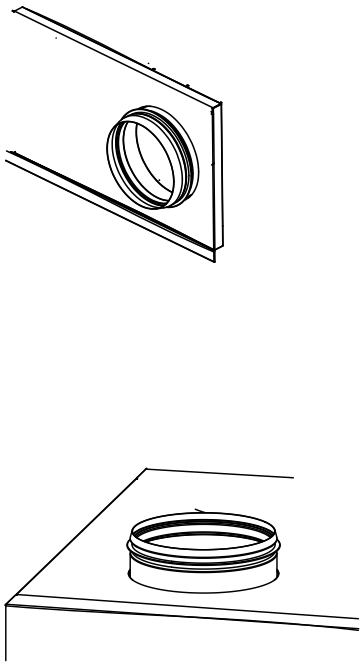

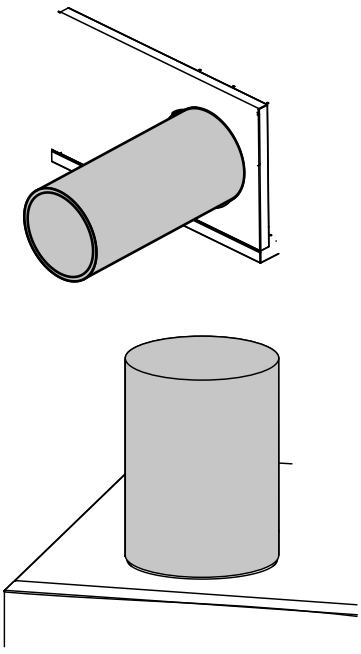

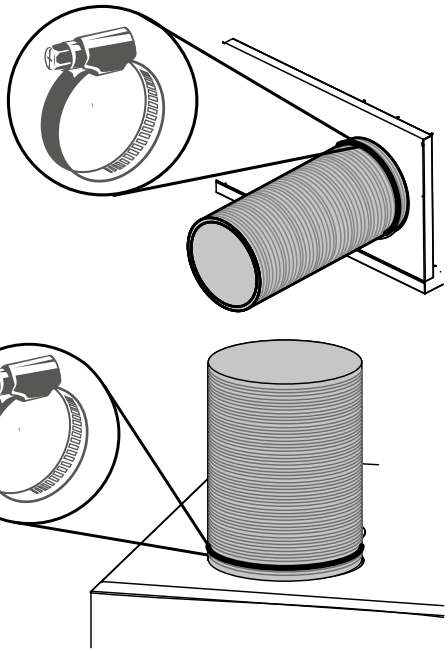

If the air ducts are too short or not connected, protect the unit parts from ingress of foreign objects.
To prevent uncontrollable access to the fan, the spigots may be covered with a protecting grille or other protecting device with mesh width no more than 12.5 mm.
While installing the unit, ensure convenient access for subsequent maintenance and repair.

Unit design

To ensure comfortable installation and provide space for accessing the unit, left and right design types of the unit are designed.

Reneo S(E) 350/351/380/400/550 L

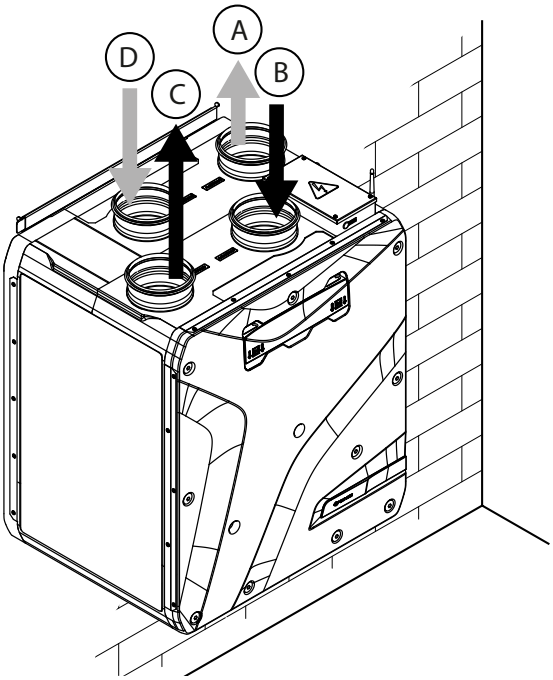

Reneo S(E) 350/351/380/400/550 R

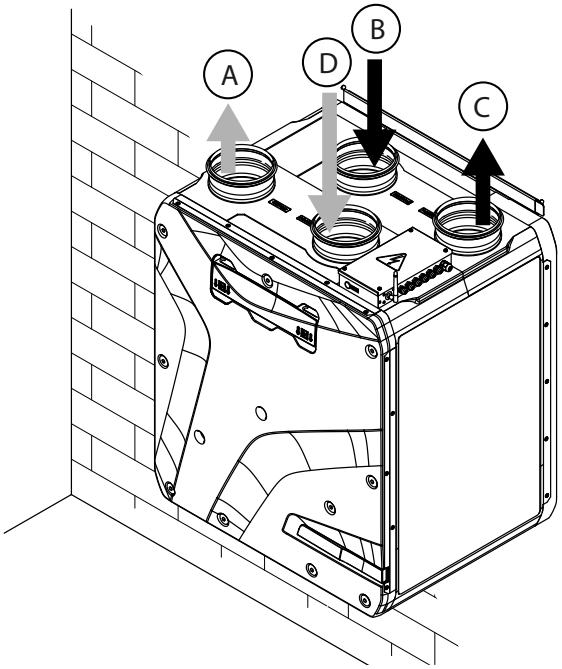

A – exhaust air, B – intake air, C – supply air, D – extract air

Minimum distances to surfaces

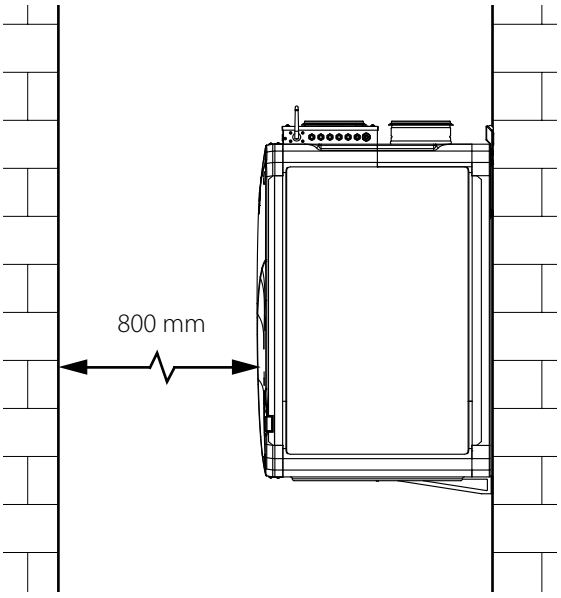

The surface for unit mounting must be smooth. Mounting the unit on an uneven surface causes the unit casing to skew, which may disrupt intended operation.

While selecting appropriate screws, consider the material of the mounting surface as well as the weight of the unit (refer to the unit's technical data). Fasteners for unit installation should be selected by a qualified technician.
Fasteners for the unit mounting are not included into delivery set and should be ordered separately.

Unit wall surface mounting

Mounting hardware for wall mounting of the unit is not included in the scope of delivery and must be ordered separately. When selecting mounting hardware, the material of the mounting surface and the weight of the unit must be taken into account (see technical specifications of the unit). The selection of mounting hardware for the unit must be carried out by a service technician.

Secure the wall bracket at the required height.

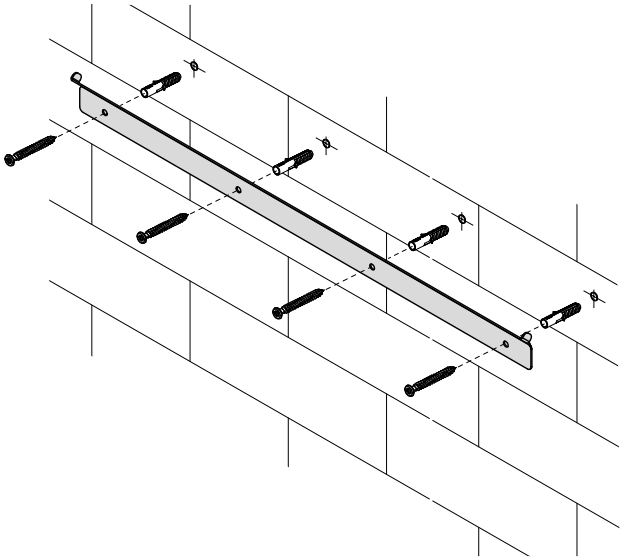

Hang the unit on the bracket.

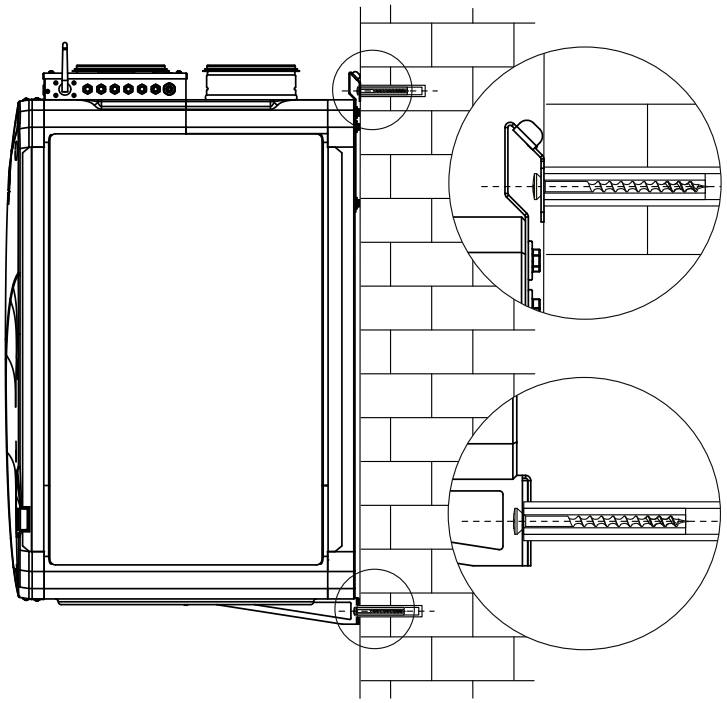

Unit floor mounting

Place the unit on the pre-mounted floor supports (minimum 150 mm high) to ensure sufficient access for the drain pipe connection, access to the U-trap and for condensate drainage system installation.

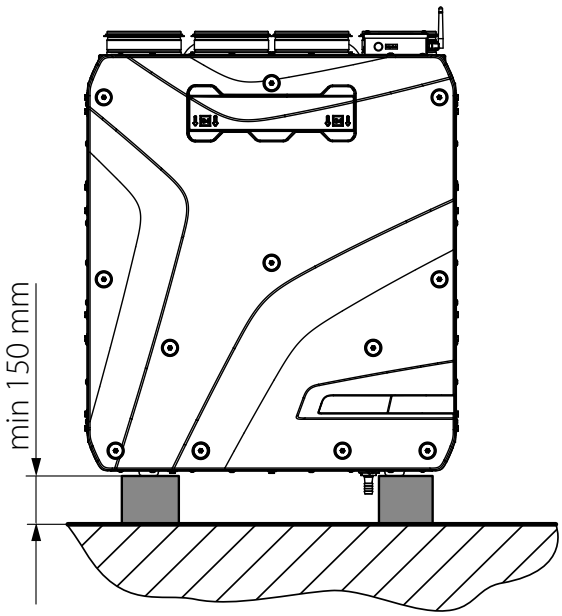

Condensate drainage

Reneo S 350/351, Reneo S 380, Reneo S 400, Reneo S 550 heat recovery units require condensate drainage, which occurs by means of the supplied drain pipe.
To install the drain pipe, remove the screws and the front panel on the service side of the unit. Remove the heat exchanger cover and take the heat exchanger out.

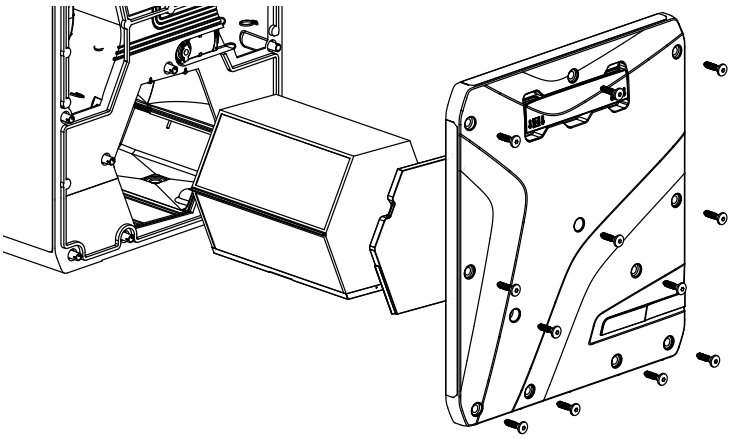

Install the drain pipe.

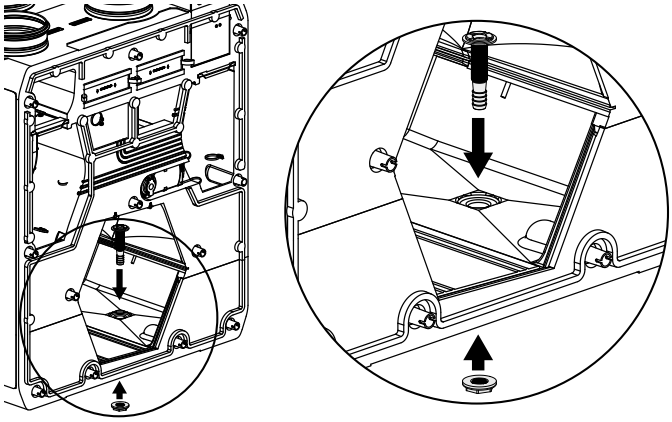

Attach a U-trap to the pipe.
Connect the drain pipe, U-trap and the sewage system with metal, plastic or rubber connection pipes. The condensate drainage system layout is presented below. The minimum downward slope of the pipes must be 3°. Each pipe is connected to a corresponding pipe.

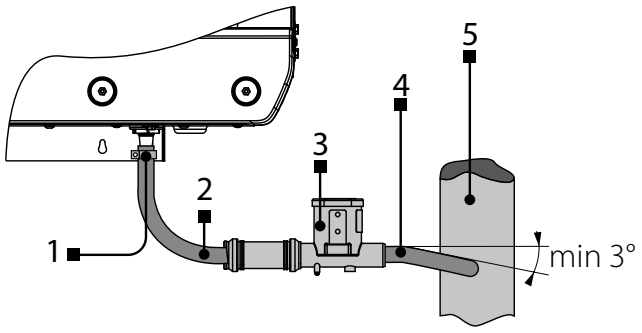

1 – drain pipe; 2 – connecting pipe; 3 – U-trap; 4 – connecting pipe; 5 – sewage system.

Before starting operation, provide free drainage for the condensed water through the sewage system. Fill up the U-trap with water before using it.
The condensate drain system is designed for use in premises with ambient temperature above 0 °C!
If the expected air temperatures are below 0 °C, the condensate drainage system must be equipped with heat insulation and pre-heating facilities.
The Reneo S 350-E/351-E, Reneo S 380-E, Reneo S 400-E, Reneo S 550-E modification does not require condensate drainage.

CONNECTION TO POWER MAINS

ANY TAMPERING WITH THE INTERNAL CONNECTIONS IS PROHIBITED AND WILL VOID THE WARRANTY.

The unit is designed for connection to power mains with the parameters specified in the "Technical data" section. The unit must be connected to power mains using durable, insulated and heat-resistant conductors (cables, wires).
The external power input must be equipped with an automatic circuit breaker (QF) built into the stationary wiring to open the circuit in the event of overload or short-circuit.
The position of the external circuit breaker must ensure free access for quick unit power-off.
The trip current of the automatic circuit breaker must exceed the maximum current consumption of the unit (refer to the "Technical data" section or to the unit label). It is recommended to select the rated current of the circuit breaker from the standard series, following the maximum current of the connected unit.
The circuit breaker is not included in the delivery set and can be ordered separately.
The actual conductor cross section selection must be based on the maximum load current, maximum conductor temperature depending on the wire type, insulation, length and installation method.
Remove four plastic screws from the cover of the control unit and remove the cover as shown in the picture in order to connect it to power mains and external devices.
Connect the power cord, the control unit cables and others through the cable glands in the control unit and follow the wiring diagram to connect them.
The wiring diagrams for power cords and external devices are shown in the picture below.

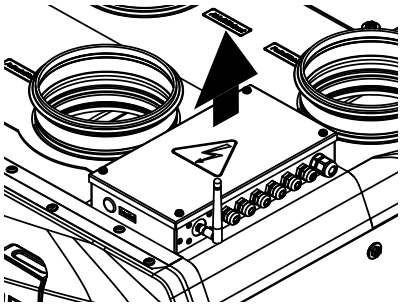

Access to the control unit

DO NOT LAY THE CABLE IN CLOSE PROXIMITY AND PARALLEL TO THE CONTROL PANEL CABLE!

DO NOT COIL THE CONTROL CABLE IN LOOPS WHILE LAYING IT.



External wiring diagram for units Reneo S 350/351/400/550 (-E) S14

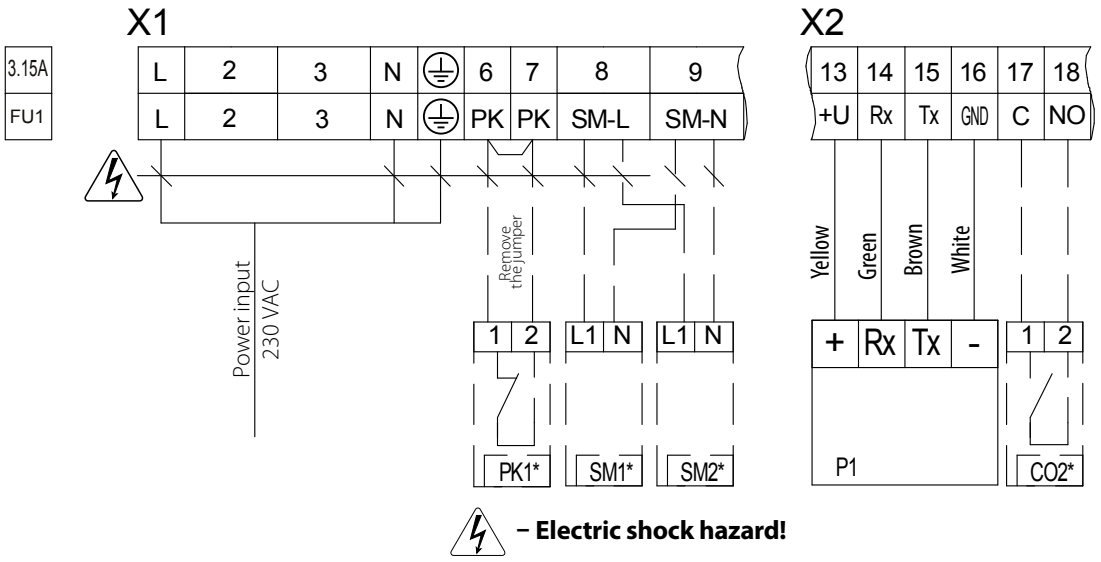

– Electric shock hazard!

Designation	Name	Type of contact	Cable	Note
P1	External control panel		4 x 0.25 mm^2	
CO2*	Carbon dioxide sensor (CO_2)	NO	2 x 0.25 mm^2	
PK1*	Contact from fire alarm panel	NC	2 x 0.75 mm^2	Remove jumper
SM1*/SM2*	External dampers: supply and extract		2 x 0.75 mm^2	
FU1	Fuse			5 x 20, slow

*The device is not included in the delivery set. Delivered upon custom request.

External wiring diagram for units Reneo S 350/351/400/550 (-E) S21

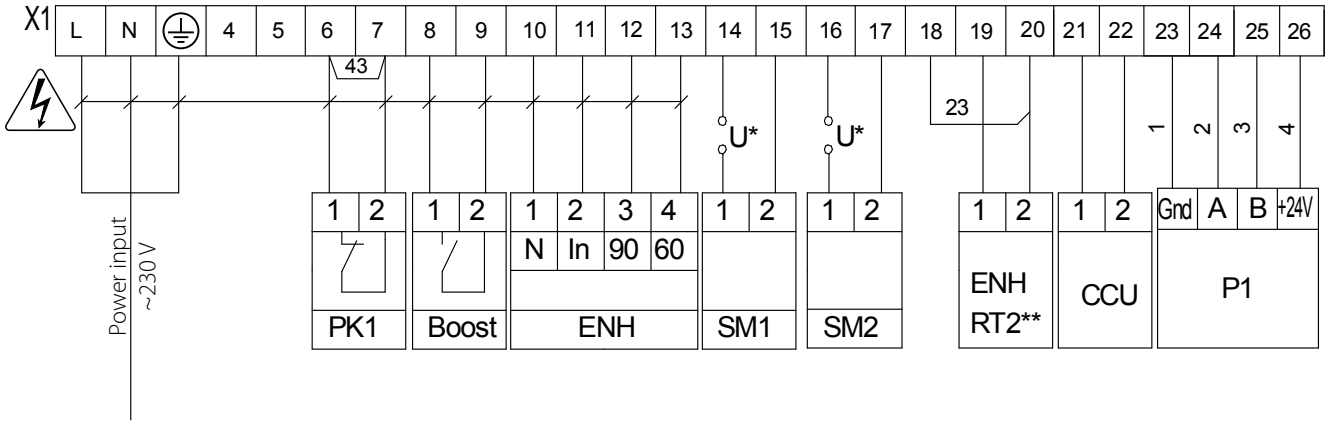

– Electric shock hazard!

Designation	Name	Type of contact	Cable	Note
SM1	Supply damper actuator	NO	2 x 0.75 mm²	3A, 30DC/~250AC
SM2	Exhaust damper actuator	NO	2 x 0.75 mm²	3A, 30DC/~250AC
PK1	Contact from fire alarm panel	NC	2 x 0.75 mm²	remove the jumper 43
P1	External control panel		4 x 0.5 mm²	
ENH	Inline reheater		4 x 0.5 mm²	
CCU	Cooler control	NO	2 x 0.75 mm²	3A, 30DC
ENH RT2**	Inline temperature sensor		2 x 0.25 mm²	remove the jumper 23
Boost	«Boost» mode On/Off Contact	NO	2 x 0.75 mm²	

*- The supply voltage of the external dampers SM1, SM2 is selected depending on the type of the damper.
**-Included in the ENH.

External wiring diagram for units Reneo S 350/351/400/550 (-E) S71

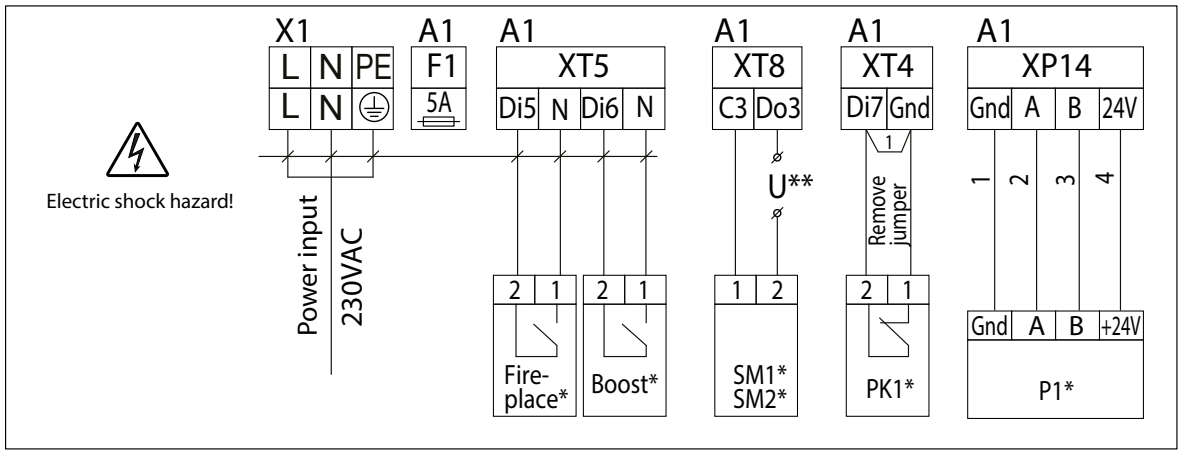

The interpretation of the designations and the characteristics of the connection cables are given in the table.

Designation	Name	Wire type	Contact type	Note
A1	Control board			
SM1*	Supply damper actuator	2x0,75 mm^2	NO	1A, 30VDC/~250VAC
SM2*	Exhaust damper actuator	2x0,75 mm^2	NO	1A, 30VDC/~250VAC
PK1*	Fire alarm panel contact	2x0,75 mm^2	NC	
P1*	Supply/exhaust damper actuator	4x0,5 mm^2		Remove jumpe 1 24VDS
Boost*	Boost mode On/Off contact	2x0,75 mm^2	NO	~230VAC
Fireplace*	Fireplace mode On/Off contact	2x0,75 mm^2	NO	~230VAC
FU1	Fuse 5 A			5×20, slow

*Is not included in the delivery set.

**Supply voltage U for external dampers SM1, SM2 is selected depending on the type of dampers.

TECHNICAL MAINTENANCE

WARNING!
All product maintenance work must be performed
service specialists.

Maintenance operations of the unit are required 3-4 times per year. They include general cleaning of the unit and the following operations:

1. Filter maintenance.
Clogged filters increase air resistance in the system and reduce supply air volume.
The filters require cleaning not less than 3-4 times per year.
Vacuum cleaning is allowed. After two consecutive cleanings the filters must be replaced. For new filters, contact the Seller.

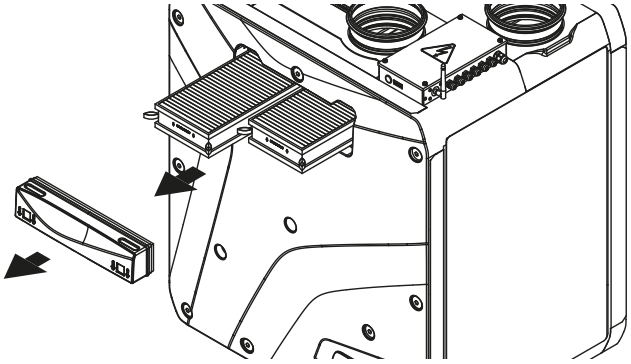

To clean or replace the filters, detach the removable lid located on the front panel on the service side of the unit. After cleaning, install the filters in reverse order.

2. Heat exchanger maintenance (once per year).
Some dust may accumulate on the heat exchanger even in case of regular maintenance of the filters. To maintain the high heat recovery efficiency, regular cleaning is required.
To clean the heat exchanger, remove it from the unit and clean the heat exchanger by using compressed air or a vacuum cleaner. After cleaning, re-install the heat exchanger into the unit.
Before removing the heat exchanger, unscrew the screws and remove the front panel on the service side of the unit. Remove the heat exchanger from the unit and clean the heat exchanger by using compressed air or a vacuum cleaner. Then, install the heat exchanger into the unit in reverse order.

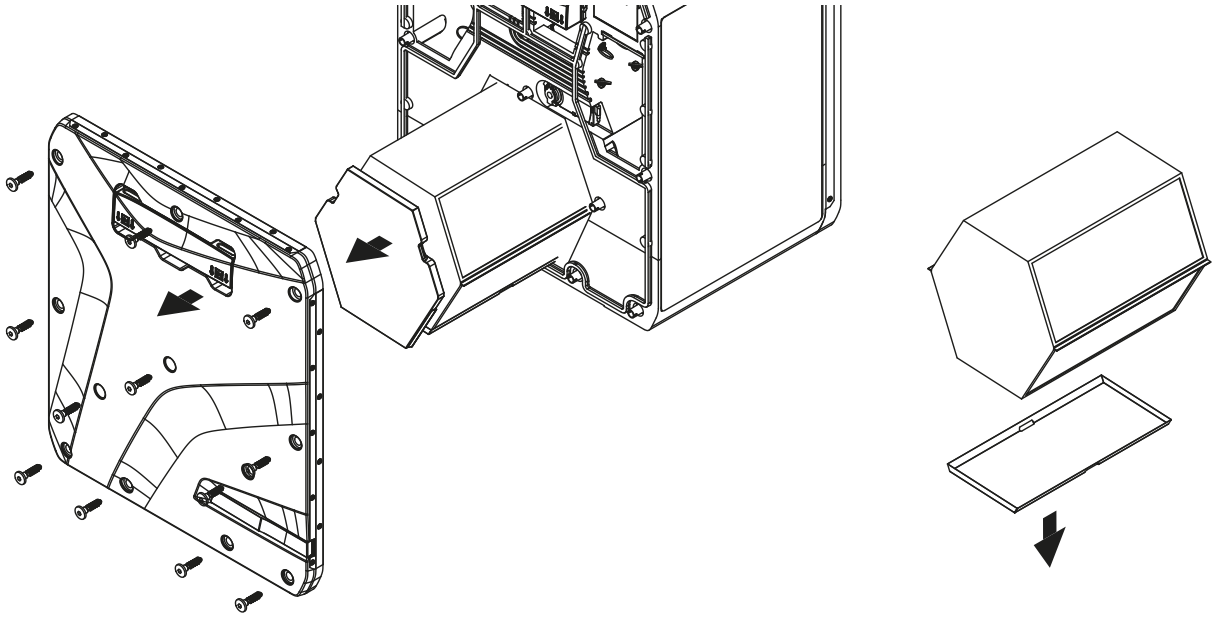

3. Fan maintenance (once per year).
Even in case of regular maintenance of the filters, some dust may accumulate inside the fans and reduce the fan performance and supply air flow.
Clean the fans with a soft cloth, brush, or using compressed air. Do not use water, aggressive solvents, or sharp objects as they may damage the impeller.
4. Maintenance of air intake devices (twice per year).
The supply grille may get clogged with leaves and other objects, which reduces the unit performance and supply air delivery. Check the supply grille twice per year and clean it as required.
5. Ductwork system maintenance (once in 5 years).
Even regular fulfilling of all the maintenance operations prescribed above may not completely prevent dirt accumulation in the air ducts, which leads to air pollution and reduces the unit capacity. Duct maintenance means regular cleaning or replacement.
6. Control unit maintenance (as required).
The control unit is located inside of the unit casing. For accessing the control unit remove the fixing screws on the panel and remove the control unit lid.

TROUBLESHOOTING

Problem	Possible reasons	Troubleshooting
The fan(s) does (do) not start when the unit is on.	No power supply.	Make sure the power supply line is connected correctly, otherwise troubleshoot the connection error.
	The motor is jammed, the impeller blades are clogged.	Turn off the unit. Troubleshoot the fan clogging. Clean the blades. Turn the unit on again.
	Overcurrent as a result of short circuit in the electric circuit.	Turn off the unit. Contact the Seller.
Cold supply air.	The extract filter is soiled.	Clean or replace the extract filter.
Low air flow.	Low set fan speed.	Set higher speed.
	The filters and the fans are clogged, the heat exchanger is clogged.	Clean or replace the filters, clean the fans and the heat exchanger.
	Ventilation system elements (air ducts, diffusers, louver shutters, grilles) are clogged, damaged or closed.	Clean or replace the ventilation system elements, such as air ducts, diffusers, louver shutters, grilles.
Increased noise, vibration.	Clogged impeller or impellers.	Clean the impeller or impellers.
	The fan or casing screw connection is loose.	Tighten the screw connection of the fans or the casing.
	No anti-vibration connectors on air duct pipe flanges.	Install anti-vibration connectors.
	The fan is malfunctioning.	Turn off the unit. Contact the Seller.
Water leakage (only for Reneo S 350/351, Reneo S 380, Reneo S 400 Reneo S 550) units).	The drainage system is soiled, damaged, or arranged incorrectly.	Clean the drainage system as required. Check the drainage system slope, the drain trap and make sure the drainage system is protected from freezing.

STORAGE AND TRANSPORTATION REGULATIONS

- Store the unit in the manufacturer's original packaging box in a dry closed ventilated premise with temperature range from +5 °C to + 40 °C and relative humidity up to 70 %.
- Storage environment must not contain aggressive vapors and chemical mixtures provoking corrosion, insulation, and sealing deformation.
- Use suitable hoist machinery for handling and storage operations to prevent possible damage to the unit.
- Follow the handling requirements applicable for the particular type of cargo.
- The unit can be carried in the original packaging by any mode of transport provided proper protection against precipitation and mechanical damage. The unit must be transported only in the working position.
- Avoid sharp blows, scratches, or rough handling during loading and unloading.
- Prior to the initial power-up after transportation at low temperatures, allow the unit to warm up at operating temperature for at least 3-4 hours.

MANUFACTURER'S WARRANTY

The product is in compliance with EU norms and standards on low voltage guidelines and electromagnetic compatibility. We hereby declare that the product complies with the provisions of Electromagnetic Compatibility (EMC) Directive 2014/30/EU of the European Parliament and of the Council, Low Voltage Directive (LVD) 2014/35/EU of the European Parliament and of the Council and CE-marking Council Directive 93/68/EEC. This certificate is issued following test carried out on samples of the product referred to above.
The manufacturer hereby warrants normal operation of the unit for 24 months after the retail sale date provided the user's observance of the transportation, storage, installation, and operation regulations. Should any malfunctions occur in the course of the unit operation through the Manufacturer's fault during the guaranteed period of operation, the user is entitled to get all the faults eliminated by the manufacturer by means of warranty repair at the factory free of charge. The warranty repair includes work specific to elimination of faults in the unit operation to ensure its intended use by the user within the guaranteed period of operation. The faults are eliminated by means of replacement or repair of the unit components or a specific part of such unit component.

The warranty repair does not include:
- routine technical maintenance
- unit installation/dismantling
- unit setup

To benefit from warranty repair, the user must provide the unit, the user's manual with the purchase date stamp, and the payment paperwork certifying the purchase. The unit model must comply with the one stated in the user's manual. Contact the Seller for warranty service.

The manufacturer's warranty does not apply to the following cases:
- User's failure to submit the unit with the entire delivery package as stated in the user's manual including submission with missing component parts previously dismounted by the user.
- Mismatch of the unit model and the brand name with the information stated on the unit packaging and in the user's manual.
- User's failure to ensure timely technical maintenance of the unit.
- Damage to the unit casing and internal components caused by the user.
- Redesign or engineering changes to the unit.
- Replacement and use of any assemblies, parts and components not approved by the manufacturer.
- Unit misuse.
- Violation of the unit installation regulations by the user.
- Violation of the unit control regulations by the user.
- Unit connection to power mains with a voltage different from the one stated in the user's manual.
- Unit breakdown due to voltage surges in power mains.
- Discretionary repair of the unit by the user.
- Unit repair by any persons without the manufacturer's authorization.
- Expiration of the unit warranty period.
- Violation of the unit transportation regulations by the user.
- Violation of the unit storage regulations by the user.
- Wrongful actions against the unit committed by third parties.
- Unit breakdown due to circumstances of insuperable force (fire, flood, earthquake, war, hostilities of any kind, blockades).
- Missing seals if provided by the user's manual.
- Failure to submit the user's manual with the unit purchase date stamp.
- Missing payment paperwork certifying the unit purchase.

FOLLOWING THE REGULATIONS STIPULATED HEREIN WILL ENSURE A LONG AND TROUBLE-FREE OPERATION OF THE UNIT

USER'S WARRANTY CLAIMS SHALL BE SUBJECT TO REVIEW ONLY UPON PRESENTATION OF THE UNIT, THE PAYMENT DOCUMENT AND THE USER'S MANUAL WITH THE PURCHASE DATE STAMP

CERTIFICATE OF ACCEPTANCE

Unit Type	Air handling unit
Model	
Serial Number	
Manufacture Date	
Quality Inspector's Stamp	

SELLER INFORMATION

Seller	
Address	
Phone Number	
E-mail	
Purchase Date	
This is to certify acceptance of the complete unit delivery with the user's manual. The warranty terms are acknowledged and accepted.	
Customer's Signature	

Seller's Stamp

INSTALLATION CERTIFICATE

The _____ unit is installed pursuant to the requirements stated in the present user's manual.		
Company name		
Address		
Phone Number		
Installation Technician's Full Name		
Installation Date:	**Signature:**	
The unit has been installed in accordance with the provisions of all the applicable local and national construction, electrical and technical codes and standards. The unit operates normally as intended by the manufacturer.		
Signature:		

Installation Stamp

WARRANTY CARD

Unit Type	Air handling unit
Model	
Serial Number	
Manufacture Date	
Purchase Date	
Warranty Period	
Seller	

Seller's Stamp



Manufacturer: Ventilation Systems LLC,
Ukraine, Kyiv, 1 M. Kotsyubynskoho Street
Address of production facilities:
Ukraine, Kyiv Region, Fastiv District, Boyarka, 36 Sobornosti Street

blaubergventilatoren.net
B279EN-03