FLYN EC

WITH DECORATIVE FRONT PANEL

Axial decorative exhaust fans with front panels, equipped with energy-efficient EC motors



Flyn EC



Flyn EC Black

Air flow:
up to 87 m³/h
24 l/s

Power:
from 2 W

SFP:
from 0.11 W/l/s

Noise level:
from 22 dBA

EC motor



Features

- The casing and the impeller are made of high-quality and durable UV-resistant plastic.
- Innovative exhaust fans with a stylish design offering a new level of comfort for bathrooms, showers, kitchens, and other living spaces.
- A shortened spigot for mounting into a ventilation shaft or direct connection to a ∅ 100 mm air duct.
- The fan is equipped with a specially designed rigid check valve to prevent backdraft and potential heat loss when the fan is idle.
- The fan exhaust spigot incorporates specially designed air rectifiers to reduce air turbulence, noise level and boost air pressure.
- High ingress protection rating makes the fan the ideal solution for ventilation of a bathroom.
- The electronic components are protected with tight covers.
- Turn-off delay timer. Adjustable delay from 2 up to 30 min.

Motor

- Reliable EC motor with ball bearings and low power consumption from 2 W.
- Maintenance-free bearings contain enough grease for 40 000 hrs of non-stop operation.
- The motor is equipped with electric overheating protection.

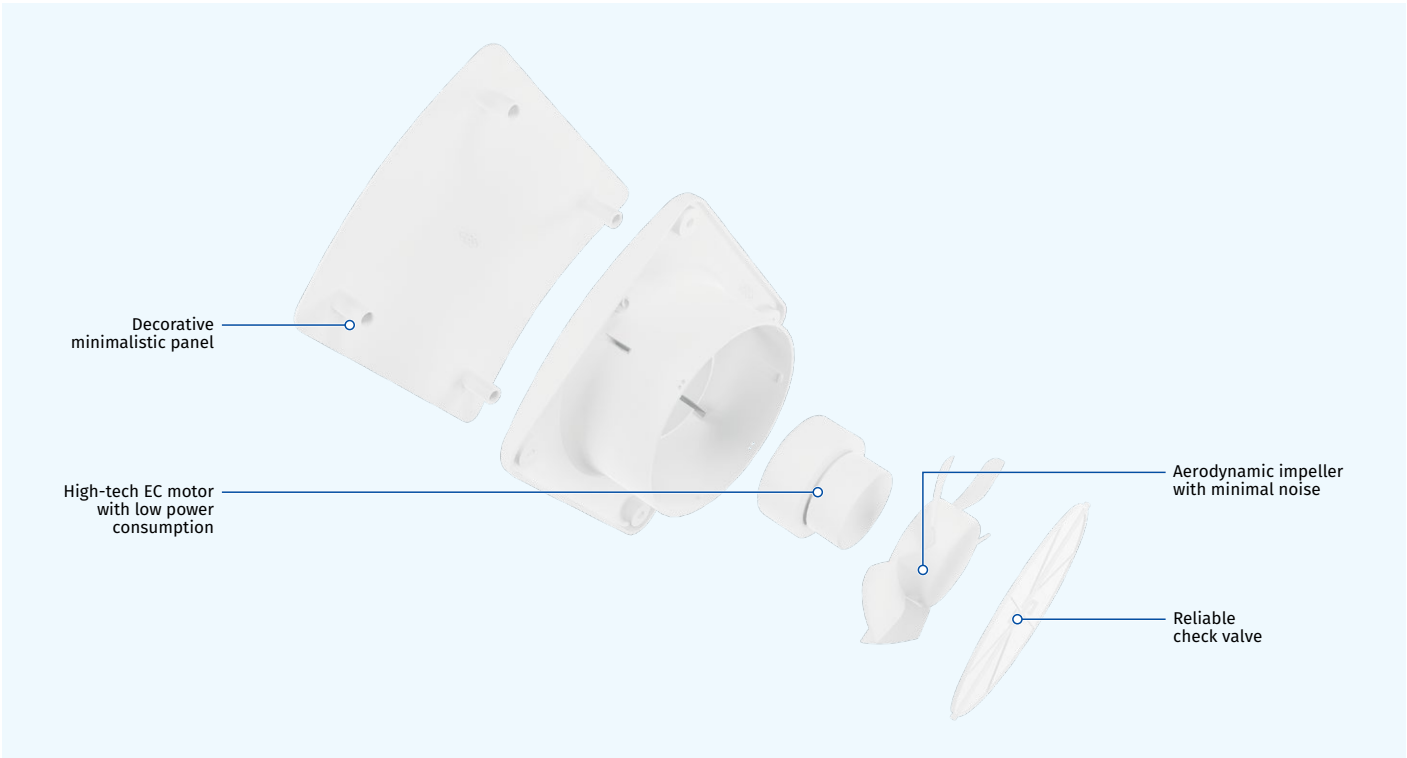

FLYN EC

WITH DECORATIVE FRONT PANEL

Overall and mounting dimensions

- Direct installation into a ventilation shaft.
- Flexible air ducts may be used in case of remote location of the ventilation shaft. The air duct is connected to the exhaust spigot with a fixing clamp.
- Wall mounting with screws.
- Suitable for ceiling mounting.

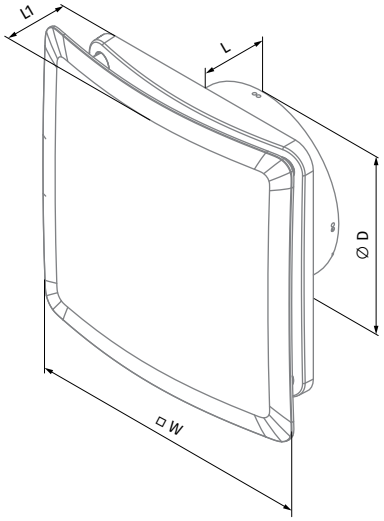

Dimensions [mm]	Ø D	L	L1	W
Flyn EC	100	37	32	180

Designation key				
Flyn	**Still**	**EC**	**100**	**Black**
Model	Low noise application	Electronically commutated motor	Spigot diameter	Color

Technical data

Model	Flyn EC 100	Flyn Still EC 100
Frequency [Hz]	50/60	50/60
Voltage [V]	100–240	100–240
Power [W]	2.7	2
Current [A]	0.03	0.02
RPM [min⁻¹]	2100	2300
Air flow [m³/h (l/s)]	87 (24)	50 (14)
SFP [W/l/s]	0.11	0.14
Sound pressure level [dBA]*	34	22

* Sound pressure level measured in free space at a distance of 3 meters from the fan.

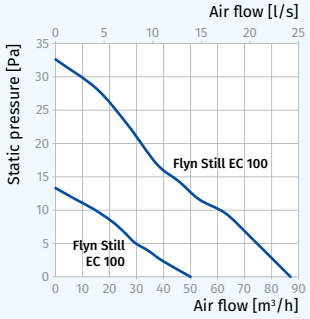

IP24



Accessories

Duct system	Flexible air ducts	Grilles and hoods			Clamps
					
BlauPlast	**BlauFlex**	**Decor, GM**			**K, KZ**