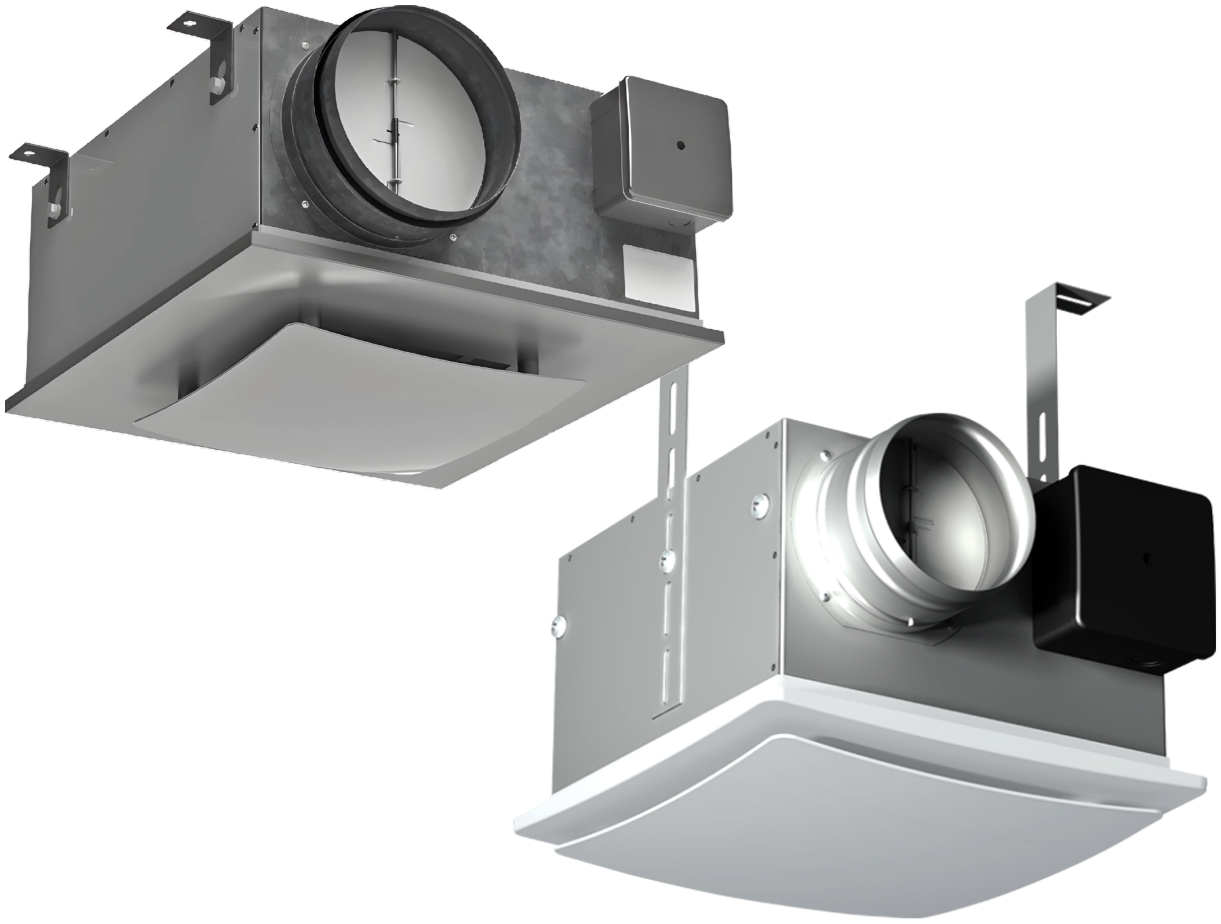

CENTRIFUGAL CEILING FAN

BOX-D 100 L
BOX-D 125 L
BOX-D 100
BOX-D 125
BOX-D 150

EN

USER'S MANUAL

BLAUBERG

CONTENTS

Safety requirements ... 2
Purpose ... 4
Delivery set ... 4
Designation key ... 4
Technical data ... 5
Design and operating principle ... 6
Mounting and set-up ... 6
Connection to power mains ... 8
Technical maintenance ... 9
Troubleshooting ... 10
Storage and transportation regulations ... 11
Manufacturer's warranty ... 12
Certificate of acceptance ... 13
Seller information ... 13
Installation certificate ... 13
Warranty card ... 13

This user's manual is a main operating document intended for technical, maintenance, and operating staff.
The manual contains information about purpose, technical details, operating principle, design, and installation of the BOX-D unit and all its modifications.
Technical and maintenance staff must have theoretical and practical training in the field of ventilation systems and should be able to work in accordance with workplace safety rules as well as construction norms and standards applicable in the territory of the country.

SAFETY REQUIREMENTS

This unit is not intended for use by persons (including children) with reduced physical, sensory or mental capabilities, or lack of experience and knowledge, unless they have been given supervision or instruction concerning use of the unit by a person responsible for their safety.
Children should be supervised to ensure that they do not play with the unit.
This appliance can be used by children aged from 8 years and above and persons with reduced physical, sensory or mental capabilities or lack of experience and knowledge if they have been given supervision or instruction concerning use of the appliance in a safe way and understand the hazards involved.
Cleaning and user maintenance shall not be done by children without supervision.
Children shall not play with the appliance.

Connection to the mains must be made through a disconnecting device, which is integrated into the fixed wiring system in accordance with the wiring rules for design of electrical units, and has a contact separation in all poles that allows for full disconnection under overvoltage category lll conditions.

Precautions must be taken to avoid the back-flow of gases into the room from the open flue of gas or other fuel-burning appliances.

The appliance may adversely affect the safe operation of appliances burning gas or other fuels (including those in other rooms) due to back flow of combustion gases. These gases can potentially result in carbon monoxide poisoning. After installation of the unit the operation of flued gas appliances should be tested by a competent person to ensure that back flow of combustion gases does not occur.

If the supply cord is damaged, it must be replaced by the manufacturer, its service agent, or similarly qualified persons in order to avoid a safety hazard.

Ensure that the unit is switched off from the supply mains before removing the guard.

All operations described in this manual must be performed by qualified personnel only, properly trained and qualified to install, make electrical connections and maintain ventilation units.
Do not attempt to install the product, connect it to the mains, or perform maintenance yourself. This is unsafe and impossible without special knowledge.
Disconnect the power supply prior to any operations with the unit.
All user's manual requirements as well as the provisions of all the applicable local and national construction, electrical, and technical norms and standards must be observed when installing and operating the unit.
Disconnect the unit from the power supply prior to any connection, servicing, maintenance, and repair operations.
Connection of the unit to power mains is allowed by a qualified electrician with a work permit for the electric units up to 1000 V after careful reading of the present user's manual.
Check the unit for any visible damage of the impeller, the casing, and the grille before starting installation. The casing internals must be free of any foreign objects that can damage the impeller blades.
While mounting the unit, avoid compression of the casing! Deformation of the casing may result in motor jam and excessive noise.
Misuse of the unit and any unauthorised modifications are not allowed.
Do not expose the unit to adverse atmospheric agents (rain, sun, etc.).
Transported air must not contain any dust or other solid impurities, sticky substances, or fibrous materials.
Do not use the unit in a hazardous or explosive environment containing spirits, gasoline, insecticides, etc.
Do not close or block the intake or extract vents in order to ensure the efficient air flow.
Do not sit on the unit and do not put objects on it.
The information in this user's manual was correct at the time of the document's preparation.
The Company reserves the right to modify the technical characteristics, design, or configuration of its products at any time in order to incorporate the latest technological developments.
Never touch the unit with wet or damp hands.
Never touch the unit when barefoot.
BEFORE INSTALLING ADDITIONAL EXTERNAL DEVICES, READ THE RELEVANT USER MANUALS.

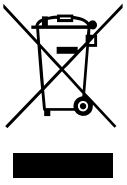

THE PRODUCT MUST BE DISPOSED SEPARATELY AT THE END OF ITS SERVICE LIFE.

DO NOT DISPOSE THE UNIT AS UNSORTED DOMESTIC WASTE.

PURPOSE

The fan is designed for exhaust ventilation of domestic, public and industrial premises with high requirements to the noise level and with limited space for mounting.
The fan is rated for continuous operation.
Transported air must not contain any flammable or explosive mixtures, evaporation of chemicals, sticky substances, fibrous materials, coarse dust and oil particles or environments favourable for the formation of hazardous substances (toxic substances, dust, pathogenic germs).

DELIVERY SET

	BOX-D 100 L, BOX-D 100, BOX-D 125 L, BOX-D 125	BOX-D 150
Fan	1 pc.	1 pc.
Fastening kit for wall side mounting	1 pc.	-
Suspended holding brackets	2 pcs.	4 pcs.
User's manual	1 pc.	1 pc.
Packing box	1 pc.	1 pc.

DESIGNATION KEY

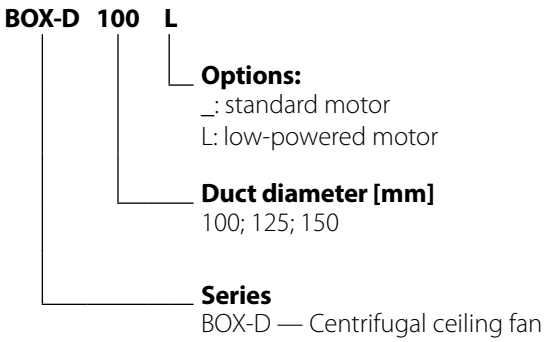

TECHNICAL DATA

The unit is designed for indoor application at ambient temperature from +1°C up to +40°C and relative humidity up to 80 %.
The unit is rated as a class I electric appliance.
Ingress protection rating against access to hazardous parts and water ingress is IPX4.
The unit design is constantly being improved, thus some models may slightly differ from those described in this manual.

BOX-D 100 L, BOX-D 100, BOX-D 125 L, BOX-D 125

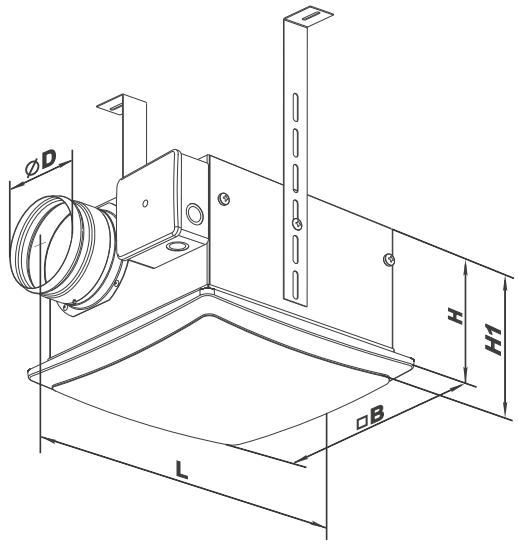

BOX-D 150

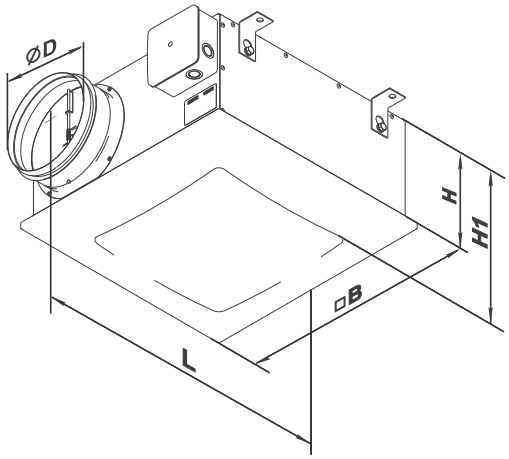

Model	Dimensions [mm]					Weight [kg]
	Ø D	B	H	H1	L	
BOX-D 100 L	100	240	160	189	305	3.4
BOX-D 100	100	240	160	189	305	3.4
BOX-D 125 L	125	240	160	189	305	3.4
BOX-D 125	125	240	160	189	305	3.4
BOX-D 150	149	355	180	215	419	6.5

DESIGN AND OPERATING PRINCIPLE

The fan comprises the casing 1 with a cover 2. The casing has an exhaust outlet 3 with a check valvewhich prevents back flow of air while the fan is off. Terminal box 4 containing the terminals for connecting the fan to power mains is mounted to the casing. Grille 5 with air filter 6 is attached to the casing with screws. Decorative front panel 7 locks into the slots on grille 5. The casing houses a single-phase electric motor with a centrifugal impeller and backward-curved blades. The electric motor has integrated thermal protection and restarts automatically.

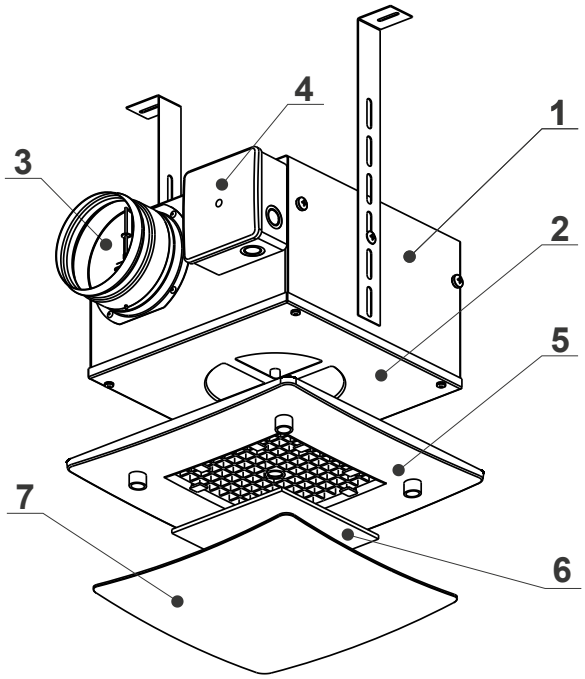

MOUNTING AND SET-UP

The fan is installed between the floor slab and suspended ceiling.

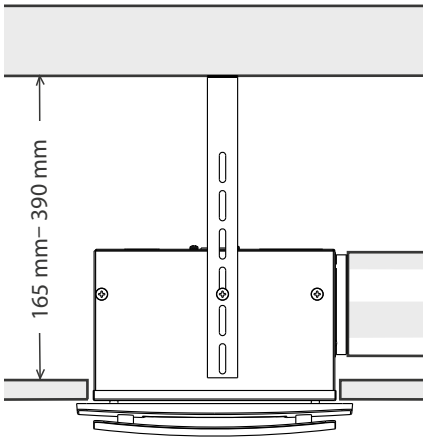

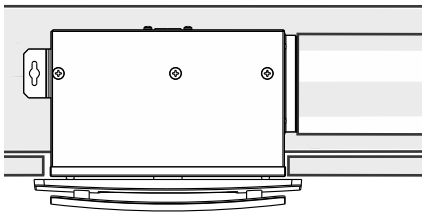

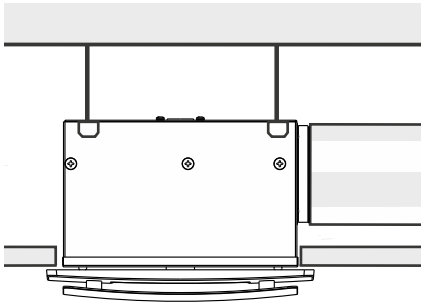

BOX-D 100 L, BOX-D 100, BOX-D 125 L, BOX-D 125

BOX-D 150

FAN MOUNTING

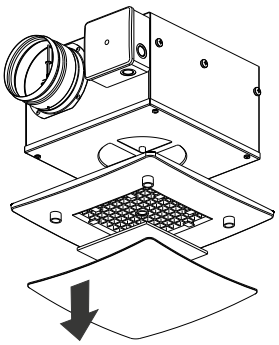

Mounting using two holders

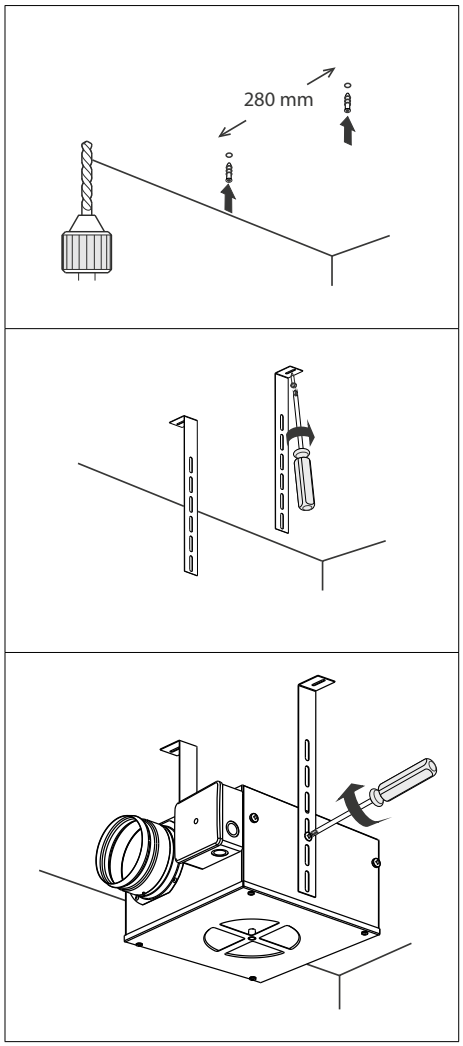

Mounting using a fastening kit for wall side mounting

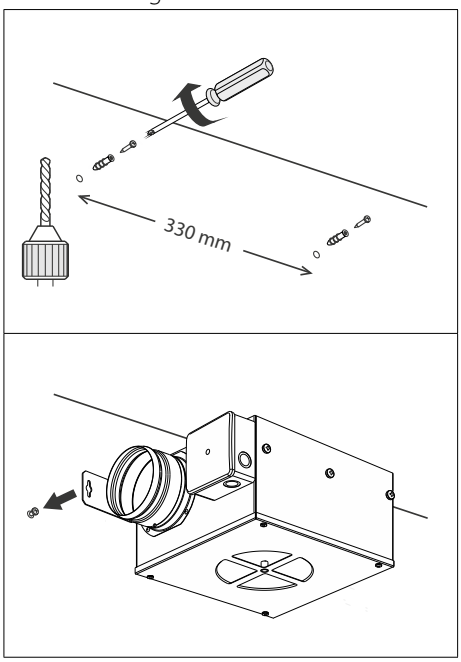

Mounting using four holders

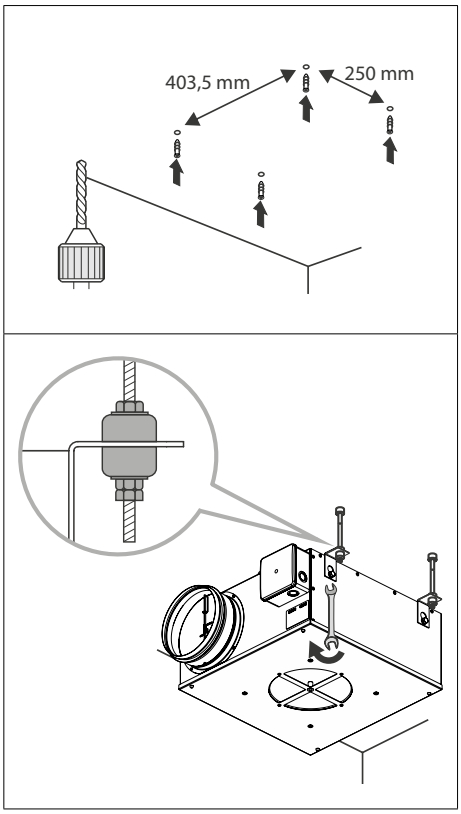

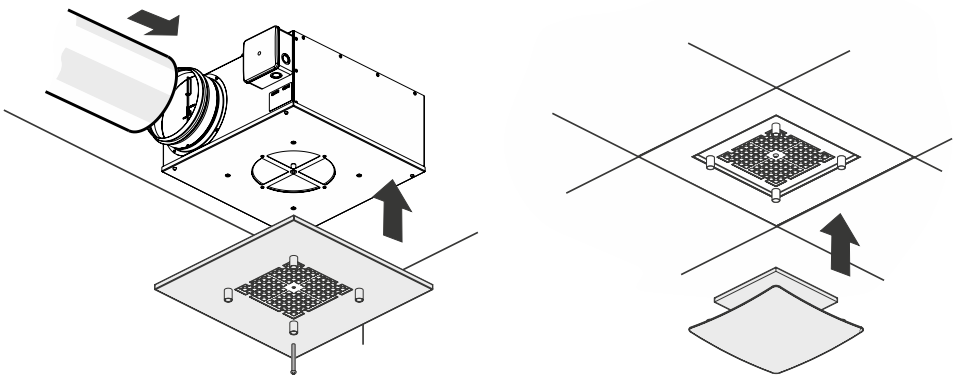

CONNECTION TO POWER MAINS

ANY TAMPERING WITH THE INTERNAL CONNECTIONS IS PROHIBITED AND WILL VOID THE WARRANTY.

The unit is rated for connection to power mains with the parameters specified in the "Technical data" section, according to the wiring diagram.
The fan must be connected using durable, insulated and heat-resistant conductors (cables, wires) through an automatic circuit breaker QF and a magnetic trip integrated into the fixed wiring system.
The recommended nominal current of the automatic cutout switch is 0.6 A, the recommended minimum conductor cross-section is 0.5 mm² .
The circuit breaker is not included in the delivery set and can be ordered separately.
The fan must be connected to the power mains through the terminal box on the fan's casing according to the wiring diagram and designations of terminals.
The terminal designations label is located inside the terminal box.

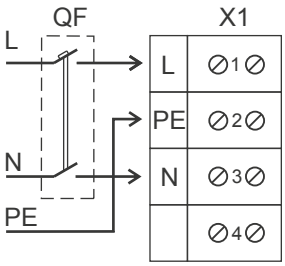

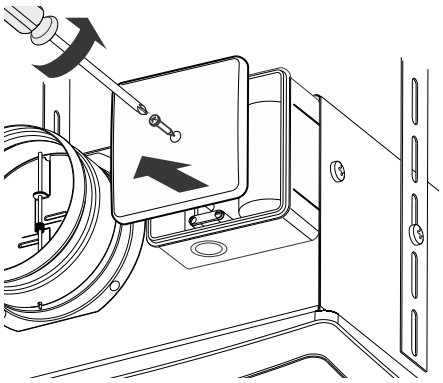

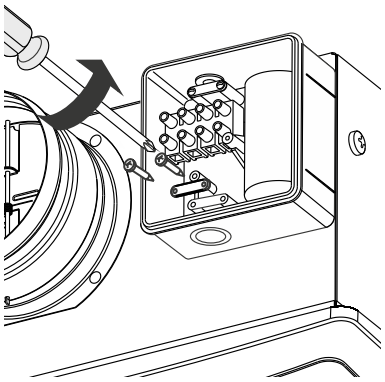

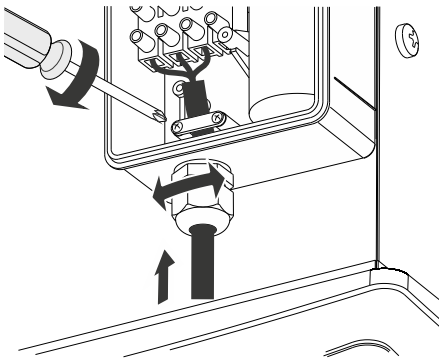

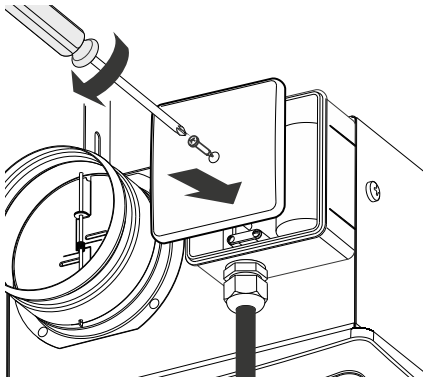

TECHNICAL MAINTENANCE

DISCONNECT THE UNIT FROM POWER SUPPLY BEFORE ANY MAINTENANCE OPERATIONS!

MAKE SURE THE UNIT IS DISCONNECTED FROM POWER MAINS BEFORE REMOVING THE PROTECTION.

The technical maintenance of the fan includes periodic cleaning of the fan surfaces from dust and dirt. The fan must remain disconnected during the procedure.
The filter must be replaced on a need-to-do basis, but at least every 6 months.
The impeller blades must be thoroughly cleaned from dust and dirt every 6 months.
The impeller cleaning and filter replacement steps are given below.

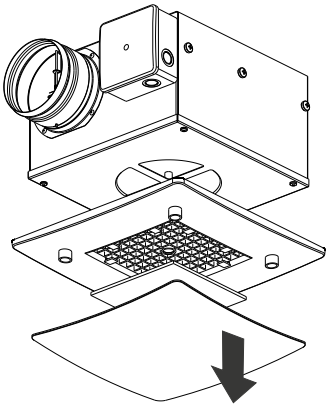

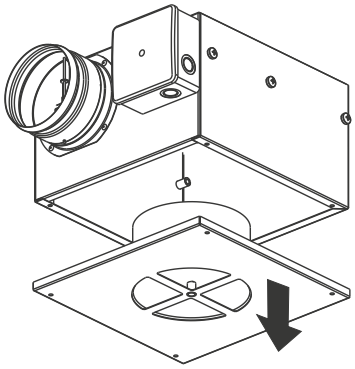

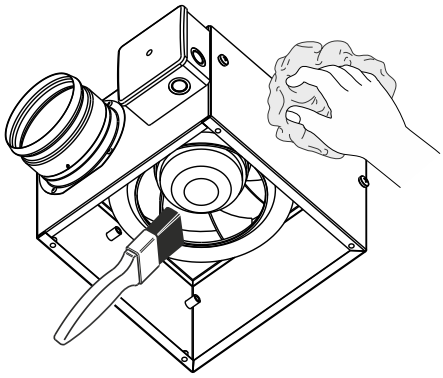

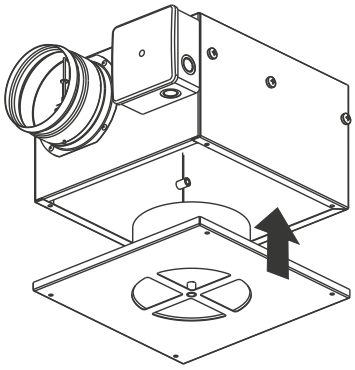

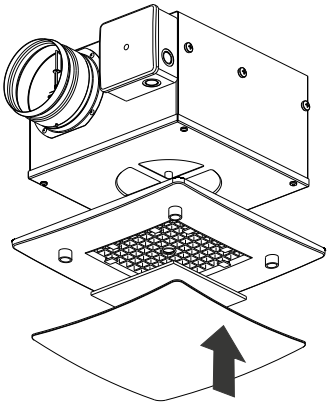

TROUBLESHOOTING

TROUBLE	POSSIBLE REASONS	TROUBLESHOOTING
When switching on, the fan does not start.	No power supply.	Check the electrical connections and the power switch status.
	Jammed motor.	Turn off the fan. Troubleshoot the impeller jamming Restart the fan.
Automatic circuit breaker tripping after the fan start-up.	Overcurrent as a result of short circuit in the electric circuit triggering the automated circuit breaker.	Disconnect the fan from power mains and contact the Seller. Do not turn on the fan again!
Low air flow.	Air ducts or other ventilation system elements are clogged. The impeller is clogged. Air ducts are damaged. Air dampers are closed.	Clean the air ducts and other ventilation system elements as well as the impeller. Check the air ducts for damage. Make sure the air dampers and louvre shutters are open.

STORAGE AND TRANSPORTATION REGULATIONS

- Store the unit in the manufacturer's original packaging box in a dry closed ventilated premise with temperature range from +5 °C to + 40 °C and relative humidity up to 70 %.
- Storage environment must not contain aggressive vapors and chemical mixtures provoking corrosion, insulation, and sealing deformation.
- Use suitable hoist machinery for handling and storage operations to prevent possible damage to the unit.
- Follow the handling requirements applicable for the particular type of cargo.
- The unit can be carried in the original packaging by any mode of transport provided proper protection against precipitation and mechanical damage. The unit must be transported only in the working position.
- Avoid sharp blows, scratches, or rough handling during loading and unloading.
- Prior to the initial power-up after transportation at low temperatures, allow the unit to warm up at operating temperature for at least 3-4 hours.

MANUFACTURER'S WARRANTY

The product is in compliance with EU norms and standards on low voltage guidelines and electromagnetic compatibility. We hereby declare that the product complies with the provisions of Electromagnetic Compatibility (EMC) Directive 2014/30/EU of the European Parliament and of the Council, Low Voltage Directive (LVD) 2014/35/EU of the European Parliament and of the Council and CE-marking Council Directive 93/68/EEC. This certificate is issued following test carried out on samples of the product referred to above.
The manufacturer hereby warrants normal operation of the unit for 60 months after the retail sale date provided the user's observance of the transportation, storage, installation, and operation regulations. Should any malfunctions occur in the course of the unit operation through the Manufacturer's fault during the guaranteed period of operation, the user is entitled to get all the faults eliminated by the manufacturer by means of warranty repair at the factory free of charge. The warranty repair includes work specific to elimination of faults in the unit operation to ensure its intended use by the user within the guaranteed period of operation. The faults are eliminated by means of replacement or repair of the unit components or a specific part of such unit component.

The warranty repair does not include:
- routine technical maintenance
- unit installation/dismantling
- unit setup

To benefit from warranty repair, the user must provide the unit, the user's manual with the purchase date stamp, and the payment paperwork certifying the purchase. The unit model must comply with the one stated in the user's manual. Contact the Seller for warranty service.

The manufacturer's warranty does not apply to the following cases:
- User's failure to submit the unit with the entire delivery package as stated in the user's manual including submission with missing component parts previously dismounted by the user.
- Mismatch of the unit model and the brand name with the information stated on the unit packaging and in the user's manual.
- User's failure to ensure timely technical maintenance of the unit.
- External damage to the unit casing (excluding external modifications as required for installation) and internal components caused by the user.
- Redesign or engineering changes to the unit.
- Replacement and use of any assemblies, parts and components not approved by the manufacturer.
- Unit misuse.
- Violation of the unit installation regulations by the user.
- Violation of the unit control regulations by the user.
- Unit connection to power mains with a voltage different from the one stated in the user's manual.
- Unit breakdown due to voltage surges in power mains.
- Discretionary repair of the unit by the user.
- Unit repair by any persons without the manufacturer's authorization.
- Expiration of the unit warranty period.
- Violation of the unit transportation regulations by the user.
- Violation of the unit storage regulations by the user.
- Wrongful actions against the unit committed by third parties.
- Unit breakdown due to circumstances of insuperable force (fire, flood, earthquake, war, hostilities of any kind, blockades).
- Missing seals if provided by the user's manual.
- Failure to submit the user's manual with the unit purchase date stamp.
- Missing payment paperwork certifying the unit purchase.



FOLLOWING THE REGULATIONS STIPULATED HEREIN WILL ENSURE A LONG AND TROUBLE-FREE OPERATION OF THE UNIT



USER'S WARRANTY CLAIMS SHALL BE SUBJECT TO REVIEW ONLY UPON PRESENTATION OF THE UNIT, THE PAYMENT DOCUMENT AND THE USER'S MANUAL WITH THE PURCHASE DATE STAMP

CERTIFICATE OF ACCEPTANCE

Unit Type	Centrifugal ceiling fan
Model	
Serial Number	
Manufacture Date	
Quality Inspector's Stamp	

SELLER INFORMATION

Seller	
Address	
Phone Number	
E-mail	
Purchase Date	
This is to certify acceptance of the complete unit delivery with the user's manual. The warranty terms are acknowledged and accepted.	
Customer's Signature	

Seller's Stamp

INSTALLATION CERTIFICATE

The _____ unit is installed pursuant to the requirements stated in the present user's manual.		
Company name		
Address		
Phone Number		
Installation Technician's Full Name		
Installation Date:	**Signature:**	
The unit has been installed in accordance with the provisions of all the applicable local and national construction, electrical and technical codes and standards. The unit operates normally as intended by the manufacturer.		
Signature:		

Installation Stamp

WARRANTY CARD

Unit Type	Centrifugal ceiling fan
Model	
Serial Number	
Manufacture Date	
Purchase Date	
Warranty Period	
Seller	

Seller's Stamp



BLAUBERG

www.blaubergventilatoren.de
B69EN-04