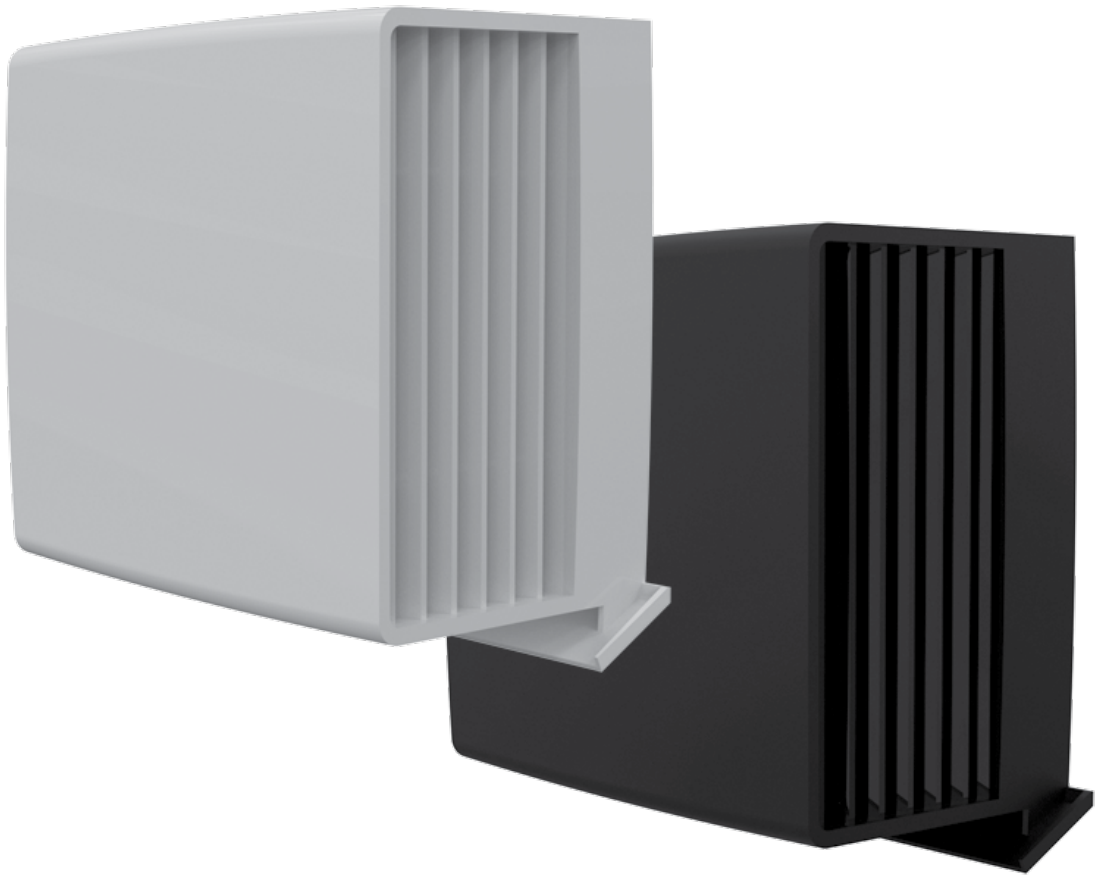

OUTER VENTILATION HOOD

AH-17 160

EN INSTALLATION INSTRUCTION

BLAUBERG

PURPOSE

The outer ventilation hood is designed to prevent ingress of water and foreign objects into the ventilation equipment from outside.

THE UNIT SHOULD NOT BE OPERATED BY CHILDREN OR PERSONS WITH REDUCED PHYSICAL, MENTAL, OR SENSORY CAPACITIES, OR THOSE WITHOUT THE APPROPRIATE TRAINING.

THE UNIT MUST BE INSTALLED AND CONNECTED ONLY BY PROPERLY QUALIFIED PERSONNEL AFTER THE APPROPRIATE BRIEFING.

THE CHOICE OF UNIT INSTALLATION LOCATION MUST PREVENT UNAUTHORISED ACCESS BY UNATTENDED CHILDREN.

TECHNICAL DATA

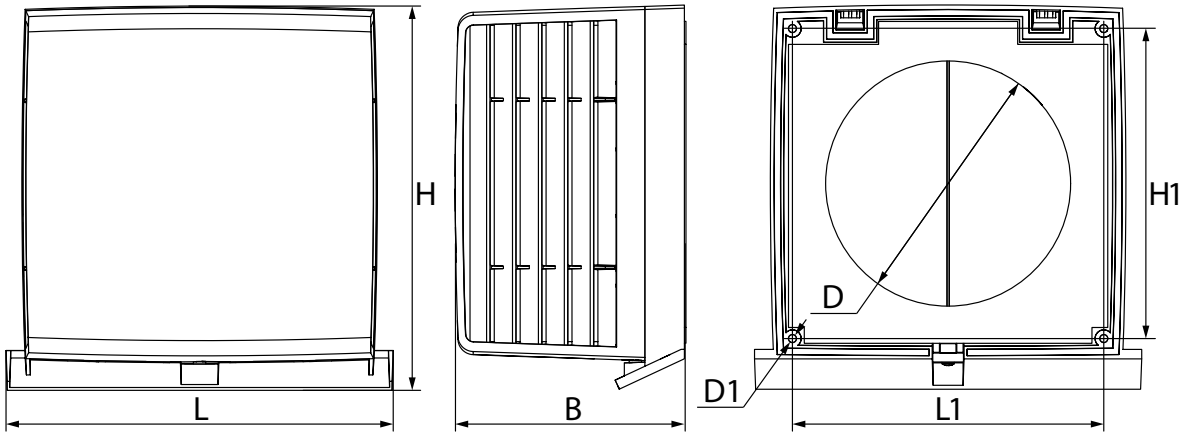

Model	L	H	B	L1	H1	D	D1
AH-17 160	245 mm (9 5/8")	243 mm (9 9/16")	145 mm (5 11/16")	197 mm (7 3/4")	196 mm (7 11/16")	164 mm (6 7/16")	5 mm (3/16")

MOUNTING AND SET-UP

The outer ventilation hood is installed after final fixation of the air duct according to the ventilator's installation instruction.
Ensure that the air duct protrudes out of the outside wall, to which the outer ventilation hood is to be installed, by a length (W) – 10 mm (3/8")-110 mm (4 5/16").

If the hood needs to be installed at a great height, use the services of an installation company with the appropriate equipment!

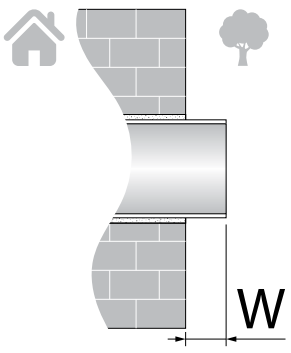

Disassemble the outer ventilation hood to provide access to fastening holes.
For that purpose, unscrew the fixing screw and pull on the frontal part from below towards yourself.

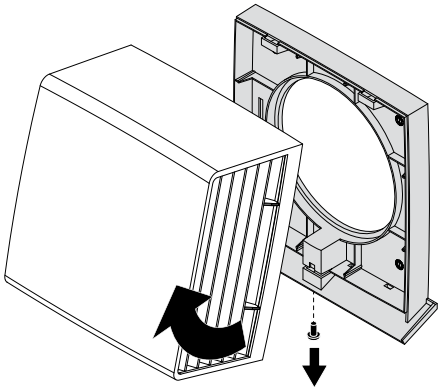

Mark the fastening holes and fix the back side of the ventilation hood on the wall.

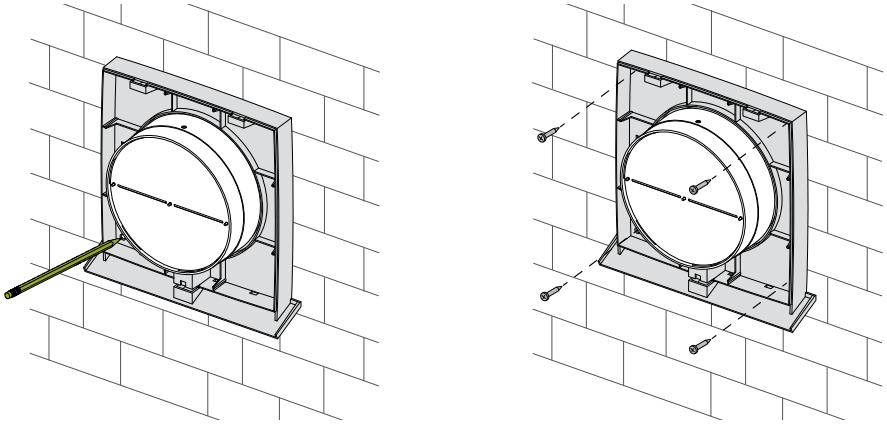

Cover the ventilation hood with the front part in reverse order.

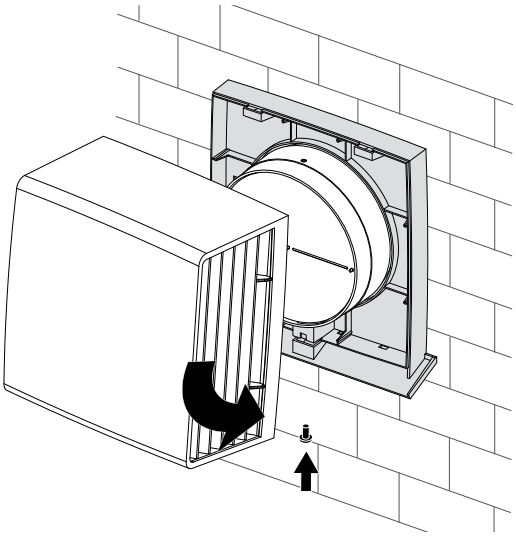



BLAUBERG

Manufacturer: Ventilation Systems LLC,
Ukraine, Kyiv, 1 M. Kotsyubynskoho Street
Address of production facilities:
Ukraine, Kyiv Region, Fastiv District, Boyarka, 36 Sobornosti Street

www.blaubergventilatoren.de
B326EN-01